This is a digital copy of a book that was preserved for generations on library shelves before it was carefully scanned by Google as part of a project to make the world's books discoverable online.

It has survived long enough for the copyright to expire and the book to enter the public domain. A public domain book is one that was never subject to copyright or whose legal copyright term has expired. Whether a book is in the public domain may vary country to country. Public domain books are our gateways to the past, representing a wealth of history, culture and knowledge that's often difficult to discover.

Marks, notations and other marginalia present in the original volume will appear in this file - a reminder of this book's long journey from the publisher to a library and finally to you.

Usage guidelines

Google is proud to partner with libraries to digitize public domain materials and make them widely accessible. Public domain books belong to the public and we are merely their custodians. Nevertheless, this work is expensive, so in order to keep providing this resource, we have taken steps to prevent abuse by commercial parties, including placing technical restrictions on automated querying.

We also ask that you:

+ *Make non-commercial use of the files* We designed Google Book Search for use by individuals, and we request that you use these files for personal, non-commercial purposes.

+ *Refrain from automated querying* Do not send automated queries of any sort to Google's system: If you are conducting research on machine translation, optical character recognition or other areas where access to a large amount of text is helpful, please contact us. We encourage the use of public domain materials for these purposes and may be able to help.

+ *Maintain attribution* The Google "watermark" you see on each file is essential for informing people about this project and helping them find additional materials through Google Book Search. Please do not remove it.

+ *Keep it legal* Whatever your use, remember that you are responsible for ensuring that what you are doing is legal. Do not assume that just because we believe a book is in the public domain for users in the United States, that the work is also in the public domain for users in other countries. Whether a book is still in copyright varies from country to country, and we can't offer guidance on whether any specific use of any specific book is allowed. Please do not assume that a book's appearance in Google Book Search means it can be used in any manner anywhere in the world. Copyright infringement liability can be quite severe.

About Google Book Search

Google's mission is to organize the world's information and to make it universally accessible and useful. Google Book Search helps readers discover the world's books while helping authors and publishers reach new audiences. You can search through the full text of this book on the web at `http://books.google.com/`

WEDDING'S

BASIC BESSEMER PROCESS

TRANSLATED FROM THE GERMAN BY

WILLIAM B. PHILLIPS, PH.D.
Prof. of Chemistry and Metallurgy, University of Alabama, Tuskaloosa. Late Prof. of Mining and Metallurgy, University North Carolina, Chapel Hill.
AND
ERNST PROCHASKA,
Metallurgical Engineer.

With a Supplementary Chapter on Dephosphorisation in the Basic Open-Hearth Furnace, by Ernst Prochaska.

NEW YORK
SCIENTIFIC PUBLISHING COMPANY
1891

COPYRIGHT, 1890, BY
SCIENTIFIC PUBLISHING CO.

45912
MAY 18 1898
GP
41
E

AUTHOR'S INTRODUCTION.

THE employment in the Bessemer converter of a lining made from the earthy bases, lime and magnesia, was the principal factor in establishing the possibility of removing, by an oxidation process, the phosphorus contained in the pig iron; while the siliceous lining used in the old Bessemer process, prevented the separation of the phosphorus. On account of this difference, we are in the habit of calling the modification of the Bessemer process introduced by the Englishman, Thomas, in which a lining of the character first named is used, briefly, the *basic*, and the older method the *acid* process.

The discovery and development of the basic Bessemer process belong to the time elapsed since the publication, in 1877, of the *Darstellung des Schmiedbaren Eisens*, in which work, naturally, the acid process alone is described. The basic process has, however, in the short period of its existence, made such a revolution in metallurgical science, and especially in German metallurgy, that now, when its practical development is essentially complete, it seems proper to publish a detailed description and a critical investigation of the apparatus employed and the general operations involved in carrying on the process.

TRANSLATORS' PREFACE.

THE Basic Bessemer or Thomas Process has not as yet met with a favorable reception at the hands of American metallurgists, in so far as the use of it in the manufacture of steel is concerned. Whatever may be the reasons for this, whether in the direction of possible legal restrictions that might be thrown around it; whether in the direction of a failure in the amount and quality of the ores suited for it; whether in the direction of a fear that the competition on the part of other steel-making processes, and of the old-established commercial fertilizers would be too severe and protracted; whether for any one of the reasons or for all of them is not for us to say.

We hope at some other time to attempt an explanation of the chief reasons why this process, which has proved so successful in Germany, especially, and in England, Austria, France and Belgium, has not taken hold in the United States. It has long since passed the experimental stage, and now deserves to rank among the great industries of the world. In 1882 there were produced by this process about 200,000 tons of steel and about 60,000 tons of slag. In 1889 the output had risen to about 2,000,000 tons of steel and about 600,000 tons of slag. As a fertilizing material the slag has forced its way against adverse criticism and open hostility to a secure place as a merchantable article. The fact that in eight years the output of the steel rose from 200,000 tons to 2,000,000 tons speaks of itself for the uses to which it can be advantageously applied.

This country is proverbial for the quickness with which it takes up new metallurgical processes, some of them, alas! of no real value. The improvements made in the acid Bessemer process by American metallurgists, especially by the most distinguished of them all, the lamented A. L. Holley, was sufficient reason for supposing that a process annexed to this, and already in success-

ful operation, enlarging as it does the limits of steel-making ores, would have met with a hearty welcome here.

Such however, has not been the case.

No Basic Bessemer steel is now made in trade quantities in the United States, nor has any serious attempt been made to produce it since the Pottstown Iron Co., of Pottstown, Pa., in 1888 decided to suspend its efforts in this direction. For some reason or other this company failed to introduce into general use the steel and slag made there.*

Whether or no this company secured the suitable ores, lining, flux, and additions, it is certainly true that in many parts of the United States, all of these are to be had with the possible exception of the basic lining. There can be no question that the failure to utilize the Thomas process in the United States cannot be charged to the lack of suitable raw materials.

One must look elsewhere for the true explanation of this failure.

It has occurred to us that perhaps one reason for the general indifference towards this process in this country is the lack of information concerning it. The literature of the subject is confined almost entirely to the pages of scientific periodicals, such as *Stahl und Eisen*, The Journal of the British Iron and Steel Institute, The Engineering and Mining Journal, The Transactions of the American Institute of Mining Engineers, The Iron Age, etc., etc., etc. To collect, digest, and arrange all that has been written would indeed have been a labor of love, but would not have been so useful as the translation of the book herewith presented. Wedding's *Basische Bessemer oder Thomas Process* appeared in Germany in 1884. The high rank of its author as a metallurgist at once gave to the book an eminent position among technical monographs, and with Ehrenwerth's *Studien über den Thomas Process*, it remains to-day the most reliable as well as the fullest description of this method of steel-making. A new edition appeared in 1889, but contains no especial additions of value.

We have attempted to render into concise and technically correct English the first edition, that of 1884, with the full permission of its distinguished author. The translation of technical

* The Pottstown Iron Company of Pottstown, Pa., has again begun the manufacture of basic Bessemer steel and of phosphate slag, and is now producing a good quality of metal, and a slag containing 21% phosporic acid.

OCTOBER, 1890.

phraseology from one language into another is always a task of more or less difficulty, involving as it does not only a competent knowledge of the meaning intended in the original, but also the ability to convey this meaning in the translation. It frequently happens therefore, that one has to choose between a certain bald literalness, which in the case in point might not be good English, and a more or less extended paraphrasing, which might not express the author's opinions. We have sought to avoid both these extremes, and to convey to the English reader the same impressions that the original German conveys to a German reader.

Those who have made like attempts will appreciate the difficulty of the task.

Finally it may be said that this translation is now the only English book which deals with this subject, and while it does not do so exhaustively, and does not claim to do so, it is hoped that it presents in a convenient shape the information sought by professional metallurgists, students, and all who are interested in the manufacture of steel.

WM. B. PHILLIPS,
University of Alabama.
ERNST PROCHASKA,
Birmingham, Ala.

SEPTEMBER, 1890.

Addendum to Preface.

We desire to express our hearty appreciation of the kindness of Prof. W. H. Pettee, Ann Arbor, Mich., in undertaking the preparation of the MS. for the press as also of a Table of Contents and an Index. To his valuable suggestions this translation owes much, and we ourselves more. His kindness has been unremitting, and we could not suffer this book to be issued without acknowledging it in the most cordial manner.

W. B. P.
E. P.

TABLE OF CONTENTS.

	PAGE
AUTHOR'S INTRODUCTION,	vii
TRANSLATORS' PREFACE,	ix
CHAPTER I.—EARLY DEPHOSPHORIZING METHODS,	1–27
Preparation of the Ores,	1
Dephosphorization by Reduction,	3
In the Blast Furnace,	3
In the Direct Process,	5
Dephosphorization by Oxidation,	6
The Refining Process,	6
Krupp's Process,	8
Bell's Process,	16
Variations of the Processes of Krupp and Bell,	17
Dephosphorization by Alkali-Carbonates,	17
Puddling,	19
Liquation,	19
The Bessemer Process,	20
Basic Lining,	20
Basic Fluxes,	25
After-Blowing,	25
CHAPTER II.—THE BASIC LINING,	28–63
Earlier Use of Basic Earthy Materials,	28
Thomas's First Patent,	30
Thomas's Second Patent,	32
Thomas's Second Patent in Actual Practice,	33
Pulverization of the Dolomite,	33
Manufacture of the Bricks,	34
Drying the Bricks,	34
Burning the Dolomite,	34
Utilization of the Bricks,	37
Total Consumption of Fuel,	38
Dolomite,	39
Alteration of Dolomite in Burning,	41
Magnesia, Lime, Strontia, Baryta, and Alumina as Primary Materials,	42
Magnesia,	42
Lime,	47
Phosphate of Lime,	48
Strontia,	49
Baryta,	50

PAGE

Alumina, ... 50
Metallic Linings, ... 51
Oxide of Iron, ... 51
Oxides of Manganese, ... 51
Metallic Walls, ... 51
Carbon Lining, ... 52
Sintering Material, ... 52
Plasticity, ... 55
Manufacture of Basic Bricks with Tar, ... 56
The Tar, ... 56
Mixing the Dehydrated Tar with the Basic Materials, . . 58
Using the Mixture, ... 59
Burning the Tar Bricks, ... 60
Treatment of the Bricks, ... 60
Mortar, ... 60
Substances other than Tar for Agglutinating the Basic Materials, 61
Carbonaceous Substances, ... 61
Mineral Substances, ... 61
Illustration of the Treatment of Tar-Bricks, . . . 62

CHAPTER III.—Construction and Lining of the Converter, 64–89
Lining of the Converter 66
The Brick Lining, ... 66
The Rammed Lining, ... 67
Mixed Method, ... 68
Other Methods, ... 68
Durability of Basic Lining, ... 68
Repairs of the Lining, ... 69
Influence of the Slag on the Destruction of the Lining, . . 71
The Converter Bottom, ... 74
Basic Bottoms with Acid Tuyeres, ... 75
Joining the Bottom to the Converter, ... 76
Durability and Repairs of Bottom, ... 78
The Converter at Peine Steel Works, ... 79
Changing of the Converter, ... 79
Changeable Parts of the Converter, ... 84
Cooling of the Converter, ... 87

CHAPTER IV.—The Materials, ... 90–115
Pig Iron, ... 90
The Use of Direct Metal from the Blast Furnace, . . 91
The Remelting of Pig Iron, ... 93
Recarbonizers, ... 95
Spiegeleisen and Ferromanganese, ... 95
Ferrosilicon and Manganese Silicon, ... 97
Scrap, ... 98
Lime, ... 98
The Burning and Preheating, ... 98
Introduction of Lime, ... 100
Amount of Lime used, ... 101
Materials used as Substitutes for Lime, ... 103

PAGE

The Blast, ... 105
Heating the Blast, ... 111
Drying the Blast, ... 111
Influence of Heating, Cooling, and Drying, ... 112
Blowing in of Solid Materials with the Blast, . . . 115

CHAPTER V.—The Basic Bessemer Process, . . 116–134
Details of Practice, ... 116
Duration of the Process, ... 118
Capacity of the Converter, ... 118
Waste, ... 119
Arrangements for Pouring, ... 119
Cranes, ... 124
Treatment of the Ingots, ... 128
Division of the Process, ... 132

CHAPTER VI.—The Chemical and Physical Reactions, 135–161
Chemical Phenomena, ... 135
Finkener's Investigations, ... 135
Kupelwieser's Investigations, ... 139
Richards's Investigations, ... 140
Stead's Investigation, ... 142
Phenomena of Oxidation, ... 144
Iron, ... 146
Silicon, ... 147
Manganese, ... 148
Carbon, ... 149
Phosphorus, ... 151
Sulphur, ... 153
Influence of the Basic Fluxes, ... 154
The Physical Phenomena, ... 156

CHAPTER VII.—General Arrangement of Basic Bessemer Works, ... 162–171

CHAPTER VIII.—Utilization of Basic Bessemer Slag, . 172–176

CHAPTER IX.—Dephosphorization in the Open Hearth, 177–180
Basic Material, ... 178
Mode of Operation, ... 178

CHAPTER X.—Economical Results of the Basic Bessemer Process, ... 181–190

APPENDIX.—Desulphurization of Pig Iron, . . . 191–193

SUPPLEMENTARY CHAPTER.—Dephosphorization in the Basic Open Hearth Furnace, (by Ernst Prochaska), 194–213

NOTES, ... 214–221

INDEX, ... 222

WEDDING'S

BASIC BESSEMER PROCESS.

CHAPTER I.

EARLY DEPHOSPHORIZING METHODS.

AT the conclusion of the section on Bessemerizing in the *Darstellung des Schmiedbaren Eisens* (1877), mention was made of the necessity of discovering ways and means for extending the process to phosphoritic pig iron. At the same time it was said that the prospect of attaining this end, by the use of means then known, was not encouraging.

It is now proposed to review some of the means employed for dephosphorizing the ores, tracing the matter from the mining of the ore, through the various processes to which it is subjected, until the final product, namely, malleable iron, is reached.

PREPARATION OF THE ORES.

By Jacobi's method, the phosphorus can be removed from ores which are free from carbonates by treatment with dilute acids. The process, as described in the *Handbuch der Eisenhüttenkunde,—Zweite Abtheilung*, p. 509, was carried out on a large scale at Kladno, as follows. The ores contained the phosphorus in the form of aluminum phosphate. They were first roasted and then treated with sulphurous acid in cement-lined stone vats. The vats were 22 m. (71½ ft.) long, 15.5 m. (50⅓ ft.) wide, and 2 m. (6½ft.) deep, with a false bottom of lattice work, and were

filled with water. The sulphurous acid was made from pyrite, absorbed in a stream of water trickling down a tower filled with coke, and was allowed to act upon the ore in the vats four to six weeks. The acid entered at the bottom of the vats, and flowed out at the top. The four vats, which were arranged in a rectangle, formed a system, so that the fresh acid flowed on the ore which had been longest under treatment, and therefore was most nearly freed of its phosphorus, while the saturated liquor flowed on the fresh ore. The ores contained 3% of phosphorus, which by this treatment was reduced to from 0.28% to 0.40%. The saturated liquor was drawn off, and used in the manufacture of fertilizers,[1] and the residue in the vats, the dephosphorized ore, was washed with water.

This method, however, has not been extended beyond the limits of the Iron Works at Kladno near Prague, either because the ores of other localities were unsuited to it, or because ores naturally carrying less phosphorus could be had for less cost than the ores treated in this way. Even at Kladno itself this method was abandoned before the discovery of the basic Bessemer process, on account of certain economic conditions existing there, and it is maintained only for the manufacture of fertilizers.

The other wet-extraction methods have proved to be uneconomical.[2]

When the phosphorus is mechanically mixed with the ores in the shape of phosphorite, hand-picking has been

---

(1) After evaporating and driving off the sulphur dioxide, which was again absorbed in the coke towers, the residue contained:

	%
Oxide of Iron,	0.57
Oxide of Aluminum,	0.61
Silica,	1.51
Lime,	13.28
Magnesia,	12.28
Sulphuric acid,	50.60
Phosphoric acid,	0.14
Water,	21.09

(2) *Handbuch der Eisenhüttenkunde, Abtheilung* II., p. 509.

resorted to, as with the ores of Gross-Bülten at Peine, or washing, as with the iron ores of the Lahn. These two methods diminish the content of phosphorus, but do not remove it entirely.

DEPHOSPHORIZATION BY REDUCTION.

I. *In the Blast Furnace.*

With the exceptions already noted, the phosphorus in the ore, the fuel, and the fluxes is completely reduced in the blast furnace,[1] if the furnace works regularly (smoothly). We cannot expect, at least within the limits of economic work, to prevent the reduction of phosphorus in the blast furnace, or to induce a re-oxidation of it in the hearth. This is to be explained by the fact that from metallic iron, or from the oxides of iron, in presence of free carbon and silica, the phosphates are always reduced, and iron phosphide formed.

The high temperature in the blast furnace is peculiarly favorable to this reaction, and, so far as the transfer of the phosphorus to the iron is concerned, it is a matter of indifference with what elements the phosphoric acid was combined, whether with iron, manganese, calcium, or aluminum. The opinion that phosphorus is volatilized[2] has been disproved by careful experiments conducted by Hilgenstock.[3] When the furnace is working well, the slag does indeed take up some phosphorus, but under ordinary conditions the quantity taken up is not one-tenth of the phosphorus-content in the pig. When ferrophosphorus, with six or more per cent. of phosphorus is made, the phosphorus-content in the slag can rise to 1% or even to 2½%.

A basic slag in the blast furnace is of no avail, since, even with a great excess of lime and magnesia, the phos-

---

(1) *Handbuch der Eisenhüttenkunde, Abtheilung* II., pp. 592–599.

(2) *Zeitschrift des Berg- und Hüttenw. Vereins für Steyermark und Kärnthen*, 1876, p. 230.

(3) *Bericht über Generalversammlung des Vereins deutscher Eisenhüttenleute am 9 December*, 1883. Compare also *Handbuch der Eisenhüttenkunde, Abtheilung* II., p. 594. Compare also *Stahl und Eisen*, vol. IV., p. 2. [Tr.]

phorus always occurs in the slag as phosphoric acid; that is, the reduced phosphorus enters the pig. With a basic slag in the blast furnace a pig poor in phosphorus can be made, but not one free of phosphorus.

The walls of a blast furnace are acid (siliceous), and even should the charge be lacking in silica, the walls themselves supply enough to raise the slag to a unisilicate. A basic slag, with a basic lining, would require too high a temperature for good working. Furthermore, in presence of carbon and carbon monoxide, this high temperature would conduce just as little to the production of a pig iron free from phosphorus, as a unisilicate does.

The matter is quite otherwise, when the furnace works irregularly and a ferriferous slag arises, favoring the absorption of iron oxide.

Then begin the reactions of the refining process, and the slag can contain larger quantities of phosphoric acid, especially should it enclose free, unreduced oxide of iron due to irregular working. Such a slag, rich in iron, is still fusible even under a considerable cooling of the furnace, and the reduction of the phosphoric acid decreases with the decrease of the temperature. Both these circumstances unite in the "direct process," which may be considered as completely "irregular."

Attempts to volatilize the phosphorus by other means, as, for instance, by the use of fluorspar, or of fluxes yielding cyanogen, or by gaseous hydrochloric acid, have been without practical results, the reason being either the excessive cost as compared with the results, or the danger of employing poisonous materials. At the best, the effect of fluorspar is doubtful.

S. Stein at Bonn has proposed cyanogen in the form of ammonium cyanide. It is, however, not to be added as such, but is first made from titanium, crude carbonate of potash and superheated steam.[1] Stein proceeds on the assumption that the phosphorus-content in blast-furnace

---

(1) D. R.-P. Nos. 4713, 8607, 9499.

slag is chiefly dependent, not upon its content of iron, but upon its basicity, and he therefore recommends, in addition to the usual materials, the use of dolomite, witherite, or beauxite, in considerable quantities.[1] But the use of a basic slag of this sort, exceeding the requirements of a unisilicate, though its basicity be guaranteed by a basic lining, would be wrecked on its high fusing point. The few experiments that were undertaken nominally at Ars in Lorraine gave no better practical results than the use of hydrochloric acid or chlorides.[2]

II. *In the Direct Process.*

The peculiarity of the direct [or Catalan, Tr.] process consists in the fact of its being able, in the presence of a basic slag, rich in iron, and with a lower temperature, to prevent the reduction of the phosphoric acid contained in the ore.[3] This has given rise time and again to experiments looking to the introduction of this process in modern iron smelting. All these efforts, however, with the exception of some which were made under the favorable conditions of rich, and pure, ores, came to naught; at least they attained success only where ingot iron[4] was made with the help of a pig-iron bath,[5] or in the direct steel process (*Erzstahlarbeit*). For even when high-carbon iron is mixed with the earthy matters in the ores, any phosphoric acid present would be reduced, so that success is not to be expected from the use of such a direct process, and in fact is not attained if the ore employed carries much phosphorus. In what manner the reduction of the phosphoric acid was prevented in the old direct processes has often been explained. The separation of the phosphoric acid in

(1) *Verhandlungen des Vereins zur Beförderung des Gewerbfleisses*, 1881, p. 531.

(2) *Handbuch der Eisenhüttenkunde, Abtheilung* II. p. 598.

(3) Ibid., *Abthl.* I., p. 573.

(4) *Flusseisen* = ingot iron. Bell, "Principles, Etc.," p. 429, makes ingot iron = mild steel. [Tr.]

(5) Ibid., *Abthl.* III. (*Die Darstellung des Schmiedbaren Eisens*), p. 555 *et seq.*, and *Verhandl. des Vereins z. Bef. des Gew.* 1884, *Sitzungsber*, p. 12.

the direct process is connected with loss of iron; if this be lessened, the separation of the acid is also lessened.

DEPHOSPHORIZATION BY OXIDATION.

Dephosphorization of iron, with the exceptions already noted, is a work of oxidation. So far as concerns the manufacture from phosphoritic pig iron of iron that can be welded, this operation, the refining process, has been for a long time successful,[1] but the attempt to manufacture ingot iron (steel) was unsuccessful until the basic Bessemer process was discovered.

I. *The Refining Process.*

Experience has shown that at the conclusion of the refining process, that is, after the oxidation of the silicon in a pig submitted to the refining process, and before the decarbonization caused by the formation of carbon monoxide, the phosphorus is oxidized, is slagged off, and under favorable circumstances, removed in the slag.

It was indeed formerly supposed that phosphorus was not removed during the refining itself, and Karsten also considered it doubtful. Experiments conducted at the instigation of the author in 1866 at Königshütte in Upper Silesia proved it to be unquestionable, so that we may dismiss the question of the possibility of removing phosphorus in the refining-fire or in the refining-hearth. On the contrary one could suppose that the removal of the slag in the short time between the ending of the desiliconizing and the beginning of the decarbonizing, would lead to the removal of the phosphorus. For at this time in the refining-hearth, as in puddling, the corresponding chemical phenomenon not only takes place but is also used for the purpose stated, as, after completion of the refining period in the refining-hearth, the slag is removed, while in puddling it is allowed to discharge over the sill or over the flue-bridge. On account of the incomplete separation of the iron from the slag, in both these

(1) *Handb. d. Eisenh., Abthl.* III., p. 18.

processes the retention of a considerable part of the phosphorus in the iron cannot be surprising.[1]

The method proposed by the author in 1865 for the manufacture of malleable iron could not be applied to the Bessemer process, i. e., to the manufacture of ingot iron.

Disregarding the lack of practical success, and in spite of the apparatus especially constructed for the purpose[2] [Figs. 1 and 2], the result which had been expected theoretically was not attained.[3]

ARRANGEMENT FOR DEPHOSPHORIZING IN THE BESSEMER CONVERTER.

FIG. 1.

Vertical section through E F.

FIG. 2.

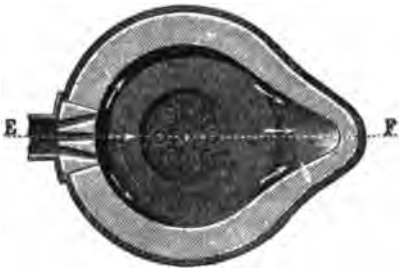

Horizontal section through A B D

It was at first thought that the reason for the failure lay in the excess of temperature and in the too rapid oxidation, but we now know that the dephosphorization was prevented simply by the silica of the converter lining. But as this reason was not known until long after the experiments, the means for overcoming the difficulty were not at hand.

In 1877, and almost at the same time, Krupp in Germany and Bell in England took the first step towards the solution of the problem. They lined the refining-hearth with material rich in oxide of iron, and also employed fluxes con-

---

(1) *Handb. d. Eisenh., Abthl.* III., p. 231.

(2) On the back wall of the converter were three tuyeres, and on the front wall a valve or trap. When the valve was opened the slag floating on top of the iron could be blown out. Pure iron slag was then added to take the place of what was blown out.

(3) *Handb. d. Eisenh., Abthl.* III., p. 462.

taining oxide of iron, and in this way avoided the free silica.

Especial thanks are due to Engineer Narjes, of Fr. Krupp's establishment, a former student of the School of Mines at Berlin, for a communication on the subject of iron-smelting, in which he discriminated the difficulties of dephosphorization, and indicated the way for avoiding them by the use of slag-linings.[1] The practical difficulties were overcome by Narjes and his colleague Bender, so that in two years, or until the basic Bessemer process opened up a new field, 17,000 tons of pig iron were dephosphorized.

On the 16th and 17th of March, 1877, at Krupp's works in Essen, the first heat on a practical scale with 8,800 lbs. of material was worked. The pig used contained 0.7% of phosphorus, which in the refined iron was reduced to 0.134% while the carbon was lowered from 3.10% to 3.03%.

On the 22d of March of the same year, Bell delivered his first epoch-making speech before the Iron and Steel Institute, in which he described his process for the purification of pig iron by means of oxide of iron, whereby the carbon was reduced 17% and the phosphorus 44.7%. Bell's provisional specification bears date April 11, 1877; Krupp's German Imperial Patent, July 2, 1877.

II. *Krupp's Process.*

Krupp's patent-claim[2] describes exactly the peculiarities of his method as compared with previous investigations. It is as follows:

"A method for dephosphorizing iron, in which the pig iron is charged in a fluid condition, subjected to a refining (desiliconizing, without such decarbonizing as would alter the chemical and physical qualities of the refined iron), and the dephosphorized product removed at the same time. This method is carried out in a rotating furnace, oxides of iron and of manganese being present, partly as lining, partly as fluxes."

The method was first described in detail by the author

---

(1) *Verhandl. d. Vereins zur Beförder. des Gewerbfl.*, 1879, p. 201.

(2) D. R-P. No. 4391.

in the *Verhandlungen des Vereins zur Beförderung des Gewerbfleisses*,[1] and later also by Holley.[2]

It is carried out with the following materials and apparatus:

The Material.—The pig iron employed should contain at least 0.3% of manganese, although 1% is best. The carbon should be as high as possible, at least 2.57%, although 3% is best. With carbon at 2.5%, however, the process can still be carried on.

Fusing the Pig.—The pig must be charged into the dephosphorization furnace in a fluid state. To this end it is either taken directly from the blast furnace, or, as at Essen, melted in a cupola. A cupola 13 ft. high suffices, and the pig is run from the fore-hearth directly into the furnace where it is to be dephosphorized. This (the cupola) does not work continuously. It is charged only for one heat at a time, taking generally 11,000 lbs., and sometimes 15,400 lbs. At Essen the consumption of coke was 8% of the [weight of the] pig, and the time of melting-down was 1½ hours. Generally a little lime was added in the cupola. The silicon in the pig should be as low as possible, not exceeding 1%, and in order to slag off the small amount of silica produced by the oxidation of the silicon, some limestone is added.

The Dephosphorization Furnace.—This is a rotating concave furnace[3] (*Tellerofen*) with an inclined axis [Figs. 3 and 4]. The outside diameter of the concavity of the hearth, *a*, is about 12 ft., the width in the clear is 9¾ ft., height of the outer wall 3 ft., depth in the clear 2 ft. The inclination is 1 to 10. The bottom of the hearth is parallel to the concavity, and joins the side-walls with somewhat rounded edges.

The hearth is made in the following manner: The iron bottom is first "clayed," then a layer of iron ore (the frag-

---

(1) 1879, p. 202.

(2) Trans. Amer. Inst. Min. Egrs., Vol. VIII., 1880, p. 156.

(3) *Handb. d. Eisenh., Abthl.* III., p. 326.

ments having a thickness of about 30 cm. (12 inches)) is put down, the interstices being filled with small pieces of ore; a strong heat is then applied, and the material fritted

KRUPP'S DEPHOSPHORIZATION FURNACE.

FIG. 3.

Section through the tap-hole.

FIG. 4.

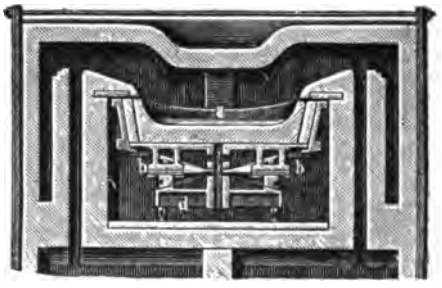

Section through the gas-ports.

into a layer of about 29 cm. (11½ inches) thickness; then a layer of more fusible ore is added and the whole vitrified.

The furnace is heated with coal gas, the four regenerators having a capacity of 24 cbm. (about 672 cu. ft.). The hearth is carried by a wagon and can be easily moved. It does not join on to the stationary part of the furnace very closely, but as the pressure under which the gas enters is inconsiderable, there is but a small loss of fuel. The hearth is turned by suitable gearing driven by a steam-engine.

Fluxes.—When the hearth is ready, from 1540 to 1760 lbs. of ore is added, equally distributed, and heated to incipient sintering. This operation is repeated for every heat. For highly phosphoritic pig the quantity of ore is increased, even to more than a ton, and, if the pig carries much silicon, lime is also added. The fluxes are always added after each run, and serve also for repairing the hearth. The weak places are especially looked after, and may be expected on the side opposite the tap. A flat iron spoon on the end of an iron rod serves for introducing the fluxes and placing them at the proper points. The ore is moistened a little, so as to prevent its being blown about by the draught, or carried into the regenerators. When the

weak places have been repaired the rest of the flux is added, the hearth being slowly revolved. The whole operation requires from 16 to 20 minutes.

The fluxes are very rich, and may be even phosphoritic, iron and manganese oxides, mostly Spanish ores with some hammer-slag.[1] The silica should be between 6% and 15%. If more silica is present, and a pig high in silicon is used, enough lime must be added to slag off the excess of silica as a unisilicate. If the free silica falls below 6%, the ore does not sinter sufficiently. As soon as all the fluxes are in, the furnace is slowly revolved (3 to 4 revolutions a minute), and the ore sintered at a white heat.

The Dephosphorization.—The molten pig is run from the cupola into the furnace, the tap-hole being closed with a plug and kept on the upper side of the furnace. As soon as all the pig is in the furnace, the violent bubbling and spitting which accompanies the transfer from the cupola ceases. The hearth, which has already been revolving 2 to 5 times a minute, is now revolved faster, 10 to 11 times a minute. Slag begins to show on the surface and rapidly increases in amount.

In 2½ to 3 minutes the iron begins to "rise," and with high-silicon pig the slag at once flows over the edge of the hearth. The rising of the iron should not begin within two minutes after the pig has all been charged; if it should, the furnace is revolved more slowly. The rising of the iron continues about two minutes, then the bath falls, and carbon monoxide begins to come off. If the purpose is to dephosphorize as completely as possible without decarbon-

(1) Analysis of Hammer-slag. H. Louis, "On the Chemistry of Puddling."—Trans. Iron and Steel Inst., 1879, I., p. 221.

	%
Silica,	14.69
Alumina,	1.51
Peroxide of Iron,	15.07
Protoxide of Iron,	63.92
Protoxide of Manganese,	3.18
Phosphoric acid,	1.60
Lime, Magnesia, etc.,	traces
	99.97 [Tr.]

izing, the furnace is now tapped, but if a diminution of the carbon-content can be allowed in order still further to lower the phosphorus, the operation is continued. The bubbles which appear on the surface and burn with a blue flame, increase in size and soon get to be 15 to 20 cm. (6 to 8 inches) across. Little balls of iron are thrown up, and soon the entire surface is covered with little springs which often spout up 20 cm. (8 inches), while the number and size of the bubbles also increases. Suddenly a great quantity of carbon monoxide is evolved over the whole surface with violent "spitting," and this easily recognizable sign is the signal for stopping. The tap-hole is brought to its lowest position, and the furnace tapped as quickly as possible. If one waits longer a complete refining sets in, and the bath "freezes."

The whole operation to the beginning of the evolution of carbon monoxide lasts 5 minutes, and to the greatest attainable dephosphorization, 8 to 10 minutes. To stop the furnace and open the tap-hole requires two minutes, the tapping itself three minutes longer.

Tapping and Utilization of the Product.—At the close of the operation the iron is much hotter than at the beginning. It flows therefore very easily into the ladle, which may be either on wheels or swung by a crane. The slag is held back by an ordinary sluice-shovel, and then allowed to flow off over the edge of the ladle. At Krupp's works the iron is then transferred into a reverberatory ingot-furnace, where, by addition of ore and forge-cinder, it is changed into a metal of suitable carbon-content, and then cast in the proper shapes.[1] If the iron is to be puddled, it is run into a system of iron pig-moulds, where it is cooled in order to be remelted in an especial cupola.

Product.—The whole heat, inclusive of the repairs and

(1) The twelve furnaces at Krupp's works are in the same building as the dephosphorization furnace, arranged in two rows with casting pit between. If dephosphorized iron is used, each furnace is fully charged generally with 5 to 5½ tons iron and, in addition, 2 to 2½ tons cold scrap and ½ ton ore, or with 7 to 8 tons dephosphorized iron and 1 ton ore without the scrap. Three heats are made in 24 hours.

charging the hearth lasts 75 minutes, so that 18 heats can be made in 24 hours, yielding on the average 80 to 90 tons of product. The loss in iron depends on the content of silicon, of phosphorus, and of the carbon which is consumed. At most this loss is 1½ to 2%, chiefly through mechanical enclosure in the slag.

Chemical Phenomena.—The opposition to the patent was based on the supposition that dephosphorization without decarbonization was not possible.

To test the truth of this a commission composed of Prof. A. W. Hofmann and the author was appointed by the Imperial Patent Office and sent to Essen. Careful samples were taken, every possibility of mistake excluded,[1] and the samples were analyzed by Prof. Dr. Finkener at Berlin.

Since the patentee claimed, not the most complete dephosphorization, but a dephosphorization without decarbonization, the process was interrupted at the beginning of the evolution of carbon monoxide, that is, somewhat sooner than is the case when the process is carried on regularly. Three samples were taken, duplicate analyses were made, and the results appear in the following table:

		Carbon. %	Phosphorus. %
I	Before the process	3.99	0.632
		3.98	0.629
	After the process	3.75	0.131
		3.77	0.133
II	Before the process	3.81	0.450
		3.78	0.445
	After the process	3.56	0.108
		3.57	0.106
III	Before the process	3.17	1.223
		3.16	1.218
	After the process	3.02	0.303
		3.04	0.301

(1) *Verhandl. d. Vereins zur Bef. d. Gewerbfl.*, 1879, p. 203.

It was therefore firmly established that the character of the pig, so far as its carbon-content was concerned, was not changed, while a considerable part of the phosphorus was removed.

Holley is authority for the following analyses obtained in actual practice at Krupp's Works:

	Phœnix Pig.	After 4 min.	After 5½ min.	After 7 min.
	%	%	%	%
Carbon,	3.30	3.27	3.27	3.32
Silicon,	0.39	0.02	0.01	0.023
Phosphorus,	0.74	0.16	0.146	0.106
Sulphur,	0.09	0.024	0.026	0.029
Manganese,	2.32	0.038	0.116	0.058
Copper,	0.14	0.15	0.14	0.143

The slag contained:

	%
Silica,	13.0
Oxide of Iron,	51.0
Oxide of Manganese,	16.6
Alumina,	11.0
Lime,	0.7
Phosphoric acid,	6.0
Sulphuric acid,	0.2
Copper,	trace

Also the following:

	Ilsede pig.	Dephosphorized iron.
	%	%
Carbon,	2.50	2.40
Silicon,	0.20 0.31	trace
Phosphorus,	2.92	0.65 0.90
Manganese,	2.61	trace.

Analysis of the ore charged in[1] and the slag:

	Ore.	Slag.
	%	%
Silica,	4.80	10.40
Oxide of Iron,	52.60	41.00
Oxide of Manganese,	8.36	19.30
Alumina,	1.20	2.00
Lime,	11.73	7.30
Magnesia,	0.80	0.70
Phosphoric acid,	3.83	20.00[2]
Carbonic acid,	7.90	—
Water,	7.88	—

Also:

	Luxemburg pig.	Dephosphorized iron.[3]
	%	%
Silicon	0.46 0.59	trace
Phosphorus	2.23 2.09	0.65 0.95
Manganese	0.18 0.19	trace

As a general thing a pig of 0.7% to 0.8% of phosphorus is used, and the phosphorus is reduced to from 0.1% to .15%. All the observations teach that the theory was rightly expressed, viz., that silicon and manganese were first slagged off, and then the phosphorus, without essential decrease of the carbon. It was, however, a new thing that the phosphorus could be still further diminished if some of the carbon was sacrificed. This was in direct opposition to many earlier experiments, and will be noticed in the review of the chemical reactions of the basic Bessemer process.

(1) Gross-Bülten ore smelted at Ilsede.

(2) Saturation-limit, 23%.

(3) For puddling.

III. *Bell's Process.*

At the same time with Fr. Krupp, Lowthian Bell was conducting experiments for the removal of phosphorus in the refining process.[1] His actual practice, however, was quite different, as he did not treat the pig in a hearth lined with solid oxides, but mixed it in a swinging furnace (*Schaukelofen*) with molten oxides.

In spite of the failure of these experiments from the standpoint of economical results, yet they were of great importance in the development of the theory.

Pig taken directly from the blast furnace was treated with molten iron oxides. An average of four experiments showed a loss of

Carbon from 3.637% to 3.227%
Phosphorus from 1.351% to 0.109%,

or the carbon lost 11 and the phosphorus 91%.

With the oxidation of the carbon the phosphorus is still further reduced as is shown by the following analyses:

	Carbon.	Silicon.	Sulphur.	Phosphorus.
	%	%	%	%
PIG,	3.264	1.493	0.113	1.516
Sample No. 1, . .	3.035	0.138	0.091	1.088
Sample No. 2, . .	3.091	0.032	0.083	0.782
Sample No. 3, . .	2.686	0.032	0.062	0.432
Sample No. 4. . .	1.273	0.009	0.024	0.065

The phosphorus was reduced 95%.

Bell established that the oxides of iron gave about the same results. He employed ores of different kinds, mill-cinder, and hammer-slag with the same success. It was thus proved that the removal of the phosphorus at the conclusion of the refining period, when using basic slag, was a

(1) Journal of the Iron and Steel Institute, 1877, p. 108 *et seq.*

process of oxidation, the oxygen being obtained from the oxides of iron.

It was now an easy matter to conceive of experiments for Bessemerizing with a lining rich in oxide of iron, as had already been recommended by the author in 1872,[1] when, quite unexpectedly, it was discovered by the Englishman, Thomas, that a far better time for dephosphorizing was not in the short time between desiliconizing and decarbonizing, but after the completion of the decarbonization. This discovery put an end to all further experiments in the direction indicated, so that even Krupp's combination of the refining process with the reverberatory ingot furnace can attain only a limited application.

IV. *Variations of the Processes of Krupp and Bell.*

The conceptions underlying Krupp's process and Bell's experiments did not remain unutilized. Furnaces and methods were multiplied. All possible rotating, swinging, and stationary furnaces were tried: here one added the iron to the ore; there another added the ore to the iron; a third caused the stream of ore and iron to meet in channels;[2] while still another mixed them in a stack.[3]

It has scarcely an historical interest to pursue the matter farther. It is tolerably certain that Krupp's method is the only one that would have stood even if the basic Bessemer process had not been discovered.

DEPHOSPHORIZATION BY ALKALI-CARBONATES.

Mention may be made of some other experiments for dephosphorizing by means of an alkaline carbonate. As far back as 1860 Eaton had made known[4] that by smelting borings from pig iron with carbonate of soda the iron was chemically changed. Drown showed that fusion of the pig

(1) *Hand. d. Eisenh. Abthl.* III. p. 347.

(2) D. R-P. 1878. No. 6078, Helmholtz; Nos. 8184, 8185, 8489, Fr. Krupp.

(3) D. R-P. No. 7117, Fr. Krupp.

(4) Kerpely, *Fortschritte*, 1879 and 1880, p. 218.

was not necessary, but that even at a high temperature an oxidation of the pig took place, proceeding from the surface inwards, affecting the content in phosphorus, silicon, and carbon. There was formed a slag of silicate of soda and phosphate of soda.

Drown gave the changes in the different layers of the pig (about 1-38 of an inch thick) as follows:[1]

		Carbon.	Silicon.	Phosphorus.
Piece of cast-pig, 12 inches long, 1 inch square, Treated 48 hours.	original,	3.56	1.38	0.87
	1st layer,	0.11	0.82	0.44
	2d layer,	0.32	1.09	0.67
	centre,	3.53	1.37	0.91
Piece of white pig, Cross section, $1\frac{1}{4} \times \frac{3}{8}$ inch, Treated 18 days.	original,	2.20	0.95	0.61
	1st layer / 2d layer	0.13	0.78	0.41
	centre,	0.38	0.92	0.52

One can hardly consider this a process of refining, as the carbon is so strongly attacked. The method has no practical importance on account of the cost of the reagent employed. The use of haloid-salts (calcium chloride, strontium chloride, barium chloride, magnesium chloride, and calcium fluoride[2]), as also that of steam, superheated or not, as has been recommended by Servaes and Feltgen,[3] and by Herlitschka,[4] has already been alluded to in the discussions of refining, puddling, and Bessemerizing. The reagents to be employed have not conditioned the granting of the patent, but the kind of apparatus and the carrying out of the process. In actual practice the patents are perfectly worthless.

---

(1) Average analyses, and shortened to two places of decimals.

(2) D. R-P. 5152, J. Barnsdorf and H. Schulze-Berge.

(3) D. R-P. 1878, No. 6271.

(4) D. R-P. 1879, No. 8754.

PUDDLING.

The investigations into the puddling process carried out under direction of the author at Königshütte[1] had already shown that in the refining, i. e. during the decarbonization of the iron, a further slagging off of the phosphorus took place. A pig with 0.497% of phosphorus suffered in refining no absolute loss but rather a relative increase of phosphorus. In the puddling furnace the phosphorus fell to 0.450% after melting down; at the beginning of the boiling the phosphorus was. 0.298%; in the fine-grained muck-bars 0.100%, and in the fibrous muck-bars 0.070%. Kollmann's analyses[2] show the same gradual removal of the phosphorus.

The ore-puddling process, carried on in rotating furnaces and with large quantities of oxidized material which favors oxidation, shows particularly that with rapid oxidation and continuous removal of the slag the phosphorus decreases even during the evolution of carbon monoxide, the decrease being inversely proportional to the temperature. It is on this account that at the conclusion of the puddling process, the phosphorus-content in the iron rises somewhat, until the blooms are quite built up. Then begins a new separation of phosphorus.

LIQUATION.

When decarbonization is complete, i. e., when the carbon has been brought to its desired amount, a considerable part of the phosphorus can be removed by means of the so-called "liquation-process."[3] In this process, the blooms are heated until the phosphoritic part of the slag melts and runs off, a low-phosphorus iron being left. Although a complete dephosphorization cannot be reached by this method, yet it does lessen the amount of phosphorus considerably, and it would have been desirable to conduct

(1) *Abthl.* III., p. 244.
(2) *Abthl.* III., p. 247.
(3) *Abthl.* III., p. 211.

experiments on the combination of it with the Bessemer process,[1] recommended by the author, had not the basic Bessemer process rendered it unnecessary to advance further in this direction.

For these reasons, therefore, the process which will be discussed in the following pages was well grounded. For in the first place it was known that a separation of the phosphorus at high temperatures was possible only in the absence of free silica, whether it come from the lining or the hearth of the furnace, or from the slagging of the silicon in the pig. Secondly; in the rapid course of the process a separation at the beginning of the refining-period was not attainable, and had to be postponed to the conclusion of the decarbonization.

The knowledge that a liquation of easily fusible compounds of more or less pure iron could be attained by crystallization, determined the author to propose experiments looking to this end. These were to be conducted by repeated fusion and crystallization in basic hearths at different levels heated with gas, and were intended to separate[2] a low-phosphorus and a high-phosphorus iron from a pig of moderate phosphorus-content.[3] But, owing to the difficulty of handling large quantities of molten iron in a laboratory, successful results from the use of this process must depend on experiments conducted on a large scale.

The Bessemer Process.

Basic Lining.

The first to recommend a non-siliceous converter lining was unquestionably Tunner, of Leoben, the Nestor of German iron-masters. In 1860, when the Bessemer process was being introduced upon the continent, he recommended the use of burned magnesite, i. e., magnesia freed of carbonic

---

(1) *Ante*, III., p. 463.

(2) The process, which is analogous to Pattinsoning and was to have been carried out perhaps in a triple-hearth reverberatory furnace, was described in *Stahl und Eisen*, 1883, p. 334.

(3) 0.1% to 1.5%.

acid.[1] The recommendation found no sympathetic response because at that time no even tolerably stable lining could be made.

The next recommendation was that of the author, viz., to use oxide of iron and to line the converter just as a rotating puddling furnace is lined. This also attained only an experimental success.[2] Experiments on a large scale were evidently prevented by the fear of having to remove the converter from its position on an especial carriage for the purpose of lining it.

Daelen's recommendation,[3] to line only the lower part of the converter with oxides, has also not been of practical importance.

After all these recommendations and experiments the first fortunate step was taken by the Englishman, Thomas, in making dolomite bricks which would stand. Dolomite alone is infusible, but it was mixed with small quantities of a substance which would cause it to sinter feebly at high temperatures.

The choice fell on silicate of alumina (clay), which, in addition to the plasticity it gave to the dolomite, would form a small amount of a fusible slag (a lime-magnesia-aluminum silicate), sufficient for fritting together the particles of dolomite.

All previous analogous recommendations (to be mentioned later) are partly inapplicable ideas, partly concerned with material of insufficient stability, and partly lacking in real success, so that Thomas is unquestionably the first discoverer.

The fundamental imperial patent on basic bricks (R–P. 5869), of Sidney Gilchrist Thomas, is dated Oct. 5th, 1878.

---

(1) *Abthl.* III., p. 347.

(2) It is often asked why it is that all real advances in modern iron smelting have been due to the English. The answer is: In Germany there are just as many new ideas as in England, but while in England, they are investigated, and perhaps one successful result reached from ten abortive attempts, in Germany great and costly experiments are feared even before the mishap.

(3) *Abthl.* III., p. 347.

In Germany it went into the possession of the Rhein Steel Works (Limited) at Ruhrort, and of the Hörde Mining and Smelting Union at Hörde. It is worthy of mention that these companies carried into general applicability a method which indeed had been already fully worked out, but which was not in successful practice. The title of the patent is: "Method for the manufacture of fire-proof basic bricks by mixing dolomitic limestone with small quantities of silica, alumina, and oxide of iron, forming the mass into bricks, and burning the bricks at white heat."

The three following claims are protected by the patent:

1. The manufacture of basic fire-proof bricks from dolomitic limestone,—of variable lime and magnesia content,—and 3 to 4½% of alumina, 5 to 9% of silica, and 0 to 2% of oxide of iron; and also the use of an artificial mixture of lime and magnesia with these ingredients in the given proportions.

2. The burning of the bricks made from these materials at a heat exceeding that employed in the manufacture of fire-proof clay bricks, i. e., at an intense white heat.

3. The burning of the bricks in a basic lined furnace (kiln), or between neutral substances and such as do not admit of the separation of silica.

The feasibility of the method rests on the fritting of the lime and magnesia (which in and of themselves are almost infusible) in the presence of silica and alumina, or oxide of iron, at a very high temperature.

Another patent of Thomas (Hörde, R–P. 6080, March 26th, 1878), proposes to substitute water-glass or silicate of soda for the clay or silicate of alumina.

Other variations followed. Thus, Hörde (R–P. 10631), for using pure limestone instead of dolomite or magnesia limestone; or pure magnesia (magnesium oxide or calcined magnesium-hydrate);[1]—d'Adelswärd (R–P. 11321);—Ramdohr (R–P. 9473, 11540, 11746, and 16271);—Rümpler (R–P. 8777);—Scheibler (R–P. 14936);—Closson (R–P.

(1) Made by methods to be hereafter described.

11456);—Eschellmann (R–P. 17058). Other silicates than those named (clay and water-glass) were proposed as fritting-materials, as, for instance, glass, slags from blast furnaces, from puddling, from welding, from Bessemerizing, etc., also asbestos, serpentine, marl, cement, ashes, oxide of iron, iron ores, and chromite.

Substances other than silicates or oxide of iron were recommended as fritting-material, especially fluorspar and cryolite, as by Claus,[1] Junghann and Uelsmann, Königs- and Laura-hütte, (R–P. 11561);—boracic acid (borax or boracite), Borsig, (R–P. 12196 and 14931);—carbonic acid and caustic alkalies, as for instance, soda and potash, Königshütte (R–P. 10411, 11539);—sulphates, as for instance sulphate of lime, André (R–P. 12250);—as also sulphates of magnesia, of iron and other so-called vitriols, and even sulphuric acid itself; later also lead compounds, litharge and minium, Bochum Union (R–P. 10683);—manganese compounds (pyrolusite and residues from the manufacture of chlorine), in the same patent.

This list of fluxing-materials can be easily extended over all the chemicals which, at a high temperature, form frittable compounds with lime, magnesia, or dolomite, without yielding an important idea. Every such material can now be mixed with pure or impure lime, magnesite or dolomite, or artificial preparations of lime or magnesia, in a raw or in a calcined condition, in the form of a powder or a solution in water, or in acids, or it can be added to the powder obtained from the calcined product. Every such substance can be used for making bricks, or can be tamped in for a lining.

In the manufacture of basic bricks or furnace linings by burning there is a considerable difficulty in keeping the material in the shape desired until it can sinter. To attain this, it has been recommended to use bricks made under great pressure, or to enclose the bricks in an iron casing or mould, as by Melaun, (R–P. 12562).

---

(1) *Glaser's Annalen*, 1880, Heft 4.

Attempts have also been made to overcome the difficulty by the addition of some binding material, which would hold the lining together until the proper temperature was reached. Thomas used raw or boiled tar, or pitch. Instead of tar, other carbonaceous substances have been recommended, as asphalt, petroleum, blood, paste, linseed-oil, resin-oil, fat, molasses, glue, etc., Melaun (R–P. 12562 and 12570). Other and quite different binding materials have been proposed, as chlorides of calcium, magnesium, and sodium, and even hydrochloric acid,—Königshütte (R–P. 10411);—or acetic acid, Kerpely (R–P. 11348). To these are also to be added some of the materials before mentioned, as tar, Königshütte (R–P. 13593);—or cryolite as a fritting material in addition to chlorides, Königshütte (R–P. 11561).

Instead of lime, dolomite and magnesia, other similar substances have been proposed, namely:

1. Phosphate of lime (phosphorite, bone ash, etc.), mixed with the different fritting and binding materials, i. e., with tar, and also with chlorides, Königshütte (R–P. 11360), and with caustic alkalies and alkaline carbonates, Königshütte (R–P. 15510).
2. Carbonate of strontium (strontianite), raw or calcined, with or without tar, aluminous iron ore, etc., Stöckmann (R–P. 24226).
3. Alumina (beauxite, precipitated alumina, emery, etc.), alone or mixed with clay, lime, dolomite, etc., with or without a binding material, raw or calcined.[1]
4. Carbon in the form of coke or gas-carbon, with asphalt, tar, petroleum, syrup, or other carbonaceous binding material.

Of all these methods and materials for the manufacture of a basic converter-lining, the mixture of dolomite and anhydrous tar is almost the only one that has worked its way into actual practice.

---

(1) Gutehoffnungshütte has a patent (R–P. 9701) for lining the Bessemer converter with beauxite.

Basic Fluxes (or Additions).

While the exclusion of free silica can be attained by the use of a non-siliceous lining, yet the injurious effect of the silica produced by the oxidation of the silicon in the pig must be provided against by the use of basic fluxes. None of the fluxes which had been experimented with had proved to be of value in the separation of the phosphorus.[1] Oxides of iron[2] also had been used without success[3] when the lining was siliceous; even as additions to lime or dolomite in the basic Bessemer process in small quantities they are indeed not necessary, although not injurious.

It was again reserved for the discoverer, Thomas, to find in limestone the proper flux for the basic Bessemer process, a material which naturally could be useful only in the employment of a basic lining. Limestone had been used in other processes, e. g., in the puddling process, but for the most part without favorable results.[4]

Instead of the additions of lime, dolomite and oxide of iron, or mixtures of these, as claimed in the patent, many other substances, not affecting the basicity of the slag, have been recommended, as cryolite, fluorspar, caustic alkalies, alkaline carbonates, strontianite, etc.

The additions (or fluxes) were to be charged into the converter through its nose, or blown in with the blast.

After-Blowing.

Thomas's fundamental patent (R–P. 12700), running from April 10, 1879, also owned by the Rhein Steel Works (Limited) and the Hörde Mining and Smelting Union which have done even more for this than for the manufacture of basic bricks, claims: "The after-blowing after com-

(1) *Abthl.* III., pp. 448–458.

(2) In 1865 the author proposed pure oxides of iron or iron slags as compensation for the phosphoritic slag that was to be tapped off.

(3) *Abthl.* III., p. 451.

(4) *Abthl.* III., p. 867, *et seq.* Karsten thought that by this method he could improve a cold-short iron.

plete decarbonization in connection with the addition of basic substances, through which a basic earthy slag is obtained, in a basic lined Bessemer converter."

For the success of the process three principal conditions are necessary, basic lining, basic flux, after-blowing. Of these three the after-blowing is the most important. It is of less consequence whether the basic flux is charged in or blown in, in what manner the flux is previously heated, or whether the iron is rich or poor in phosphorus. (Ferro-phosphorus can also be used, R–P. 34929, 34930).

Over-blowing[1] at the conclusion of the decarbonization, if the product was too high in manganese, had been practised before Thomas's discovery, as for instance at Unterwellenborn in Thuringia. But dephosphorization was not reached, because the two other conditions, basic lining and basic flux were absent. The oxidation of the phosphorus during the after-blow in the regular Thomas process is caused by the oxygen brought in by the blast. Instead of this, it has been sought to make use of the oxygen of the iron and manganese oxides which are formed.

In order to avoid the after-blow entirely, it has been attempted to make a more fluid slag, than pure lime or dolomite slag, by the use of fluorspar, cryolite, sodium chloride, magnesium chloride, soda, saltpetre, strontianite, and other oxygen and haloid salts of the alkalies and alkaline earths. No practical success has been attained, however, and the after-blow is still in force,—Hörde (R–P. 10472, 13660, 14468, and 14578). Agreeably to the recommendations of the author[2] for the acid Bessemer process, the division also of the basic Bessemer into two parts has been proposed. The first part should deal with the desiliconizing and decarbonizing of the iron in an ordinary acid lined converter, Osann (R–P. 9898); Harmet-Hörde, (R–P. 8549);—or in some other suitable apparatus, Krupp

(1) "Over-blow" does not begin until after the metalloids are removed. "After-blow," that part of a blow between the removal of the carbon and the removal of the phosphorus.—Trans. Iron and Steel Inst., 1879, I., p 220 [Tr]

(2) *Abthl.* III., p. 462.

(R–P. 11022). The second part should deal with the dephosphorization in a basic lined converter, Harmet-Hörde (R–P. 8549), or in a furnace lined with iron and manganese oxides, Osann, (R–P. 9896); Krupp (R–P. 11022). Thomas has already proposed to dephosphorize pig iron in a basic lined reverberatory furnace.

This method, using basic fluxes, such as lime, magnesia, and oxide of iron, with admission of air, has been improved by the application of a blast, Hörde (R–P. 11389), and refined iron, Hörde (R–P. 11390).

Snelus has sought to dephosphorize in basic lined cupolas; André at Gruben used the same method (R–P. 9635). The difficulty of retaining the basic lining and the basic bottom for a long time, has led to many arrangements which allow of rapid repairs or renewals of these parts. For instance, there has been an attempt to provide means for easily removing the converter from its trunnions so as to carry it bodily into the repair-shops, Daelen (R–P. 11361); Holley, (R–P. 12830); Justice, (R–P. 13696).

For the same purpose also the converter has been constructed in rings and segments, although Holley's recommendation of a movable bottom, as for the acid converter, has proved to be the best. Very considerable advances have been made in the arrangement of the entire plant, as for instance, the separation of the casting from the converting department.

We can now close this general account of the principles underlying the basic Bessemer process, and the patents. A critical discussion of the various points is possible only after the description of the process, the apparatus used, and the phenomena which occur.

CHAPTER II.

THE BASIC LINING.

Earlier Use of Basic Earthy Materials.

For a long time, in localities where they occur, it has been customary to use magnesium silicates, such as talcose slate, soapstone, serpentine, etc., in metallurgical operations for fire-proof materials. They were used either in a crude or a calcined condition, pulverized, and then mixed with clay into a plastic mass.

Bischof[1] has furnished some instances of this practice: thus, talcose slate from Fohnsdorf in the south Alps, and serpentine from the same locality with 44% of silica and 43% of magnesia have been used for lining the hearth of blast furnaces, at Oberdorf near St. Catherine's in the north Alps bricks have been made of magnesite with 20% by volume of Blansko clay. In Göpfersgrün bricks have been made of soapstone.

On account of their high content in silica all these rocks and mixtures are comparatively easily fusible, and useless for dephosphorization in the Bessemer converter. When used in a crude condition, their content in water causes them to crack and disintegrate. Magnesite, dolomite and limestone have also been used, the latter as hearthstone for blast furnaces. In the absence of silica and alumina their fusing point is very high, but in a calcined condition they are unmanageable, having but little plasticity, and when used crude (or raw) the evolution of carbonic acid causes cracks, and, after cooling, the avidity with which they absorb moisture causes them to fall to pieces.

It has, however, but seldom been attempted to use these

---

(1) Dingler's *Polytechnisches Journal*, 1880, vol. CCXXXVII., p. 51, *et seq.*

rocks in the dephosphorization of iron. The unsuccessful use of lime-hearths in the puddling furnace, and of magnesia or alumina hearths in the reverberatory ingot furnace[1] must deter one from this attempt.

The high fusing point of such rocks (often occurring in nature in sufficient purity) has of late led to renewed experiments for their utilization in the purification of pig iron by the Bessemer process, and for finding ways and means for manufacturing from them basic materials of sufficient durability. It must be said that the proper means of attaining this was by mixing these rocks with a substance or substances which would enable one to sinter them feebly.

Lencauchez seems to have been the first to propose this. He recommended making bricks of calcined lime mixed with hydrocarbon oils, oxide of zinc, borax, glass or sand, and moisten the mixture with calcium-chloride lye. Neither he, nor those who afterwards experimented in the same direction, viz., Müller in Paris, Tessié du Motay and Pourcel,[2] have, however, reached a successful result. Gruner also, who, in 1875, in his work on metallurgy recommended the addition of clay to calcined dolomite, failed of success.

It seems that all these experimenters were wrecked by the lack of a suitable furnace (or kiln) for attaining a sintering temperature.

Snelus came nearer to solving the problem. On September 20, 1872, he took out a British patent[3] for the manufacture of a material for basic linings for metallurgical apparatus. He proposed to employ a mixture of lime and magnesia with a small quantity of clay and oxide of iron, keeping the silica as low as possible. He was, however, unable to experiment with it on a practical scale, owing to his time being already fully occupied by the affairs of the company he was managing. It was not to the interest of

---

(1) *Abthl.* III., pp. 267 and 274.

(2) Kerpely, *Fortschritte*, 1879 and 1880, p. 277.

(3) No. 908.

this company that these experiments should be conducted, as it was itself manufacturing pig iron free of phosphorus.[1]

Snelus was certainly working in the right direction, not only as regards the basic lining but also and especially as regards the whole dephosphorization process, but the situation in which he was placed did not admit of the carrying out of his plans.

This was the condition of affairs when Thomas succeeded in carrying out on a practical scale what indeed was already well-known theoretically, but had not been done practically. The honor to be given to Thomas is in no wise to be diminished by the consideration that a number of fortunate combinations rendered the discovery possible. The way had indeed been marked out, but the goal had not been reached.

After having finished his studies at the School of Mines in Jermyn Street, London, and passed the examination successfully, Sidney Gilchrist Thomas resided in London and gave himself up to chemical studies. Before he had reached a successful result as regards the composition of a suitable basic lining, he associated with himself his cousin, Percy C. Gilchrist. This gentleman was chemist to the Blaenavon Works in South Wales, and secured permission for them to use a small Bessemer converter of 1000 pounds capacity then at these works. The contents of the lecture which Thomas proposed to deliver before the Iron and Steel Institute at Paris in 1878, however, shows how little had really been accomplished. This lecture was not delivered, and so far as concerns the securing of a German patent, he was fortunate in not having delivered it.

THOMAS'S FIRST PATENT.

Sidney Gilchrist Thomas in Battersea, Surrey, England, secured on the 26th of March, 1878, a German Imperial

---

(1) Journal of the Iron and Steel Institute, No. 1, 1879, p. 139. Mr. Snelus's own explanation is as follows: "I shall doubtless be asked why I did not at once follow up my discovery, and put my plans into practice. My answer is that I had just taken the management of a concern, the interests of which were opposed to the solution of this problem." [Translators.]

Patent, No. 6080, for the use of water-glass in the manufacture of a material for a basic furnace-lining. The method of manufacture was as follows: "Ordinary pulverized lime, as free as possible of phosphoric acid, is mixed with 5 to 15% by weight of a solution of water-glass (silicate of soda, or of potash) in a stamp-mill or a mortar, or with about the same quantity of clay or clay-slate, or with 10 to 20% of pulverized blast-furnace slag from iron furnaces, or with raw slag from copper furnaces. Portland cement, or any similar hydraulic cement, or hydraulic lime, or natural magnesium silicate, can also be used as a binding-material. A mixture of 3 parts lime with 2 parts Portland cement has been found very suitable. Although limestone is generally to be preferred, yet dolomite, magnesia, magnesite, lime, or witherite can be used in the mixtures instead of limestone."

The solution of water-glass should have a specific gravity of 1.5, although a weaker solution can be used. It was recommended to use from 2 to 5% of the solution of water-glass. An especially good mixture contains 80 to 88 parts of lime, 5 parts of water-glass solution, and 10 parts of clay or blast-furnace slag.

The description continues: "Calcareous rocks which contain, naturally, sufficient silica and alumina to act as binding materials, can often be used alone, or if they contain so much silica and alumina as to make them fusible, they can be mixed with pure lime." Lime with about 2 to 3% of iron ore and with addition of 5 or 6% of water-glass solution is also declared to be applicable. In all these mixtures, however, there must not be in the dried mass, more than 12% of silica.

The mixtures are either stamped in when moist, or are moulded at once into bricks. When the bricks are used they are laid with a mortar made of the same mixture.

In general, Thomas considers it necessary to dry at a moderate temperature and then burn at a high heat, but when the bricks are made entirely of lime and water-glass they should be dried at a moderate heat.

Although the method protected by this patent has not been used very extensively, yet it must be regarded as the

most important step towards securing a durable dolomite lining. In all the previous experiments with basic earthy materials, a suitable fire-proof product could not be had. The lack of durability was due to the absence of a proper sintering-material. The proper course of procedure was now found. It consisted in the use of dolomite or magnesian limestone with a binding material fritting it together when burned. But the sintering material, the binder, chosen was not the most suitable, i. e., the water-glass solution. Alkaline silicates when heated strongly with dolomite give a mass easily destructible by water, and its durability diminishes with the content in magnesia. Even with pure magnesia water-glass does not give a durable material. Thomas therefore took another step forward, and chose aluminum silicate, clay, as a sintering material in place of the alkaline silicate. This had also been used by others, yet without success. He took out another German Imperial patent.

Thomas's Second Patent.

Thomas's second patent runs from Oct. 5, 1878. It bears the number 5869, and relates to "A method for the manufacture of fire-proof basic bricks, by mixing magnesian limestone with small quantities of silica, alumina, and oxide of iron, forming the mass into bricks and burning these at a white heat." The fire-proof basic bricks were thus to be made from magnesian limestone, which contains the suitable amounts of silica and alumina naturally, or has these added. The material recommended was an aluminous-magnesian limestone, containing from 3 to 4½% of alumina, 5 to 9% of silica, with or without oxide of iron, which however should not exceed 2%.

If such does not occur naturally, a mixture of clay, clay-slate, or even aluminous blast-furnace slag, or aluminous limestone, is recommended. A good proportion is 8 to 9% of silica, 4% of alumina, and 1.5% of oxide of iron. The burned bricks should contain 80 to 90% of lime and magnesia, and never more than 20% of silica. The finely ground

material is mixed with water, the bricks formed under pressure, dried at a gentle heat, and burned at a white heat in a kiln whose bottom is "basic."

The essential part of this method, aside from the use of dolomite, the fundamental material of the first patent, is the use of aluminum silicate as sintering-material, and the burning at a very high temperature, say that of the fusing point of malleable iron. The fusing point of platinum, given as necessary, is not attained, and should not be. Since at the high temperature reached a fusion of the bricks in contact with the walls would inevitably ensue, the walls of the kiln wherever they might touch the bricks must also be of basic material.

The stamp of practicability has been impressed in this way upon the discovery, and all that Thomas's predecessors sought in vain to accomplish has been achieved. As a matter of fact this method was used for a long time before people realized the great difficulties in maintaining a basic lined kiln, and the disadvantages from an economic standpoint of the great consumption of fuel in maintaining the high temperature. At the present time this method is not employed at most works.

THOMAS'S SECOND PATENT IN ACTUAL PRACTICE.

Pulverization of the Dolomite.

The dolomite must be mixed with clay (if in its natural state it does not contain a sufficient quantity of this) and finely pulverized. After being coarsely pulverized by hand, or in stone-breakers, it is treated to the best advantage in edge-mills. The rollers in the edge-mills weigh about 11,000 lbs. (Rotheerde near Aachen), and are made of case-hardened cast iron or steel, and are replaceable. Dolomite, which already contains the necessary quantity of clay, is not so finely pulverized, being crushed to the size of peas. Crushing to this size yields enough powder for filling the spaces left in the brick moulds, and is carried on successfully in centrifugal mills, as at Alexandrowsky, or in

(so-called) mortar mills, as at Peine. If the dolomite is burned before being used, it is generally merely pulverized by hand before burning.

Manufacture of the Bricks.

At Hörde, in Westphalia, they began using a dolomite with about 56% of calcium carbonate and 40.5% magnesium carbonate. It was burned, finely ground, mixed with 3% (2 to 4% according to the amount of clay in the dolomite) of a "fat" fire-proof clay, formed into bricks, and burned. Afterwards they used a dolomite from Westheim containing of itself the necessary quantity of clay. This clay decomposes on exposure to the atmosphere. The fine dust is screened off, the rest is ground, mixed with the dust, kneaded with water, put into the moulds, and compressed under the blows of heavy wooden hammers. At Middlesbrough the dolomite is finely ground, made into bricks, and burned. Since, however, the distortion in the burned bricks is too great to allow of their immediate use, they are reground, and remoulded. They then retain their form so well that they can be used without mortar.

Drying the Bricks.

In whatever way the bricks are made, whether by the Hörde or the Middlesbrough method, they are first carefully air-dried on lattices, and then at a gentle heat on top of the kiln. Treated in this way they can afterwards be exposed to a high heat without cracking or losing their shape too much. A very considerable shrinking, 24% and even to 50%, cannot, however, be prevented as yet.

Burning the Dolomite.[1]

The dolomite is burned (calcined) either in reverberatory or in stack furnaces, and always at a very high temperature.

---

(1) The same method is used for calcining all kinds of basic materials, when high temperatures are to be attained.

If it already contains the necessary sintering materials it is burned before being pulverized, but if not, it is first mixed with these, pulverized, and then burned. If, however, it promises to oppose considerable resistance to the pulverization, owing to its being too hard, even though it should have to be mixed with the sintering materials, it is burned and then pulverized.

The reverberatories are simple affairs, nearly cubical in shape, with a cradle-roof (*Tonnengewölbe*). They have 5 or 6 horizontal grates on the outside for coal-firing. The bottom is of basic bricks, and generally also the lower part of the walls. Between the fire-proof clay or quartz (Dinas) bricks forming the upper part of the walls (and the roof) and the basic bricks, is a layer of tar, or coke mixed with tar, as at Kladno.

As a rule each furnace holds about 11,000 lbs. of dolomite, and consumes 22,000 lbs. of coal, although at some places, as for instance at Union, near Dortmund, the coal consumption is only 75 to 80% by weight of the dolomite.

More suitable still are the reverberatory gas furnaces, and the Hörde annular kilns are also very economical, if the burning is continuous, i. e. if the consumption of the calcined material keeps pace with the output of the kilns.

If coke low in ash can be had the cupola furnace is better than any. The cupola is a simple cylinder lined with basic bricks. In Oberhausen, using such a cupola, the consumption of coke is 80% of the calcined product, the furnace being charged with alternate layers of pulverized dolomite of the size of one's fist and coke.

At Alexandrowsky, near St. Petersburg, a shaft furnace (or stack) is used for calcining the dolomite; it has a diameter of 5½ ft. (1.70 m.), and a height of 11 ft. (3.5 m.).[1] The walls of the stack are 6 inches thick, and are provided with numerous openings for bringing down any masses that may adhere to them. The stack rests on a double wall of masonry, 20 inches above the floor, the double inclined grate being built in between. The stack was formerly built

(1) *Stahl und Eisen*, 1882, No. 12, p. 608.

of dolomite, but this not proving a good material, it is now built of chrome ore from the Urals,[1] which is pulverized and mixed with two volumes of clay as a binding material and one volume of lime for fritting the silica.

The furnace is heated with wood and coke, and then charged with 1232 lbs. of dolomite and 572 to 660 lbs. of coke, in alternate layers. The furnace is drawn twice in 24 hours, the total yield being 7040 lbs. of burned dolomite. The consumption of coke per hundred pounds of the burned dolomite is 120 lbs.[2]

The furnace is run under a low pressure blast. Gas firing is also to be recommended in the cupola furnace, as it gets rid of the ashes. In this case the cupola should have the same form as the gas-fired roasting furnaces described in the second volume of the *Handbuch der Eisenhüttenkunde.*

Burning the Bricks.

The burning of the bricks demands at least a basic bottom, and a basic lining wherever the bricks might touch the walls. It is far better to line the entire furnace with basic materials, but it is very difficult to make a basic roof for a reverberatory. The steam evolved from the bricks at the beginning of the burning destroys a basic roof even quicker than the changes in the temperature due to drawing and filling the furnace.

The reverberatories are generally built wall to wall in a row so as to diminish the loss of heat. Each apartment holds about 1500 bricks, laid loosely and with spaces like lattice work between them. The bricks should not extend in the kiln higher than the spring of the roof.

The kilns are fired mostly from one side on two or three grates (horizontal grates for stone coal). At Hörde the kilns are fired from both ends, the grates being in pairs. When the kilns are fired from one side, the charging and

(1) Analysis: Silica, 8%; Oxide of iron, 13.5%; Alumina, 13.0%; Oxide of Chromium, 51.0%; Lime, 1.5%; Magnesia, 13.0%.

(2) In Angleur the cupola for calcining dolomite has a diameter of about 4 ft. (1.3 m). Two and one-half tons of coke are used for heating up. The yield in 24 hours is 12 tons, with a coke consumption of 75%.

withdrawing openings are on the opposite side, and are built up during the firing. When the kilns are fired from both sides (or both ends), these openings are between the grates.

The gaseous products of combustion escape into the kilns through numerous openings in the bottom, under which (i. e. the bottom) are 3 or 6 channels parallel to the long axis of the kiln. These channels are covered with iron plates, not touching each other,[1] but arranged so that there shall generally be three openings for each channel. Great care should be bestowed upon the number, size and position of these openings between the plates in order to secure an equable distribution of the heat and a homogeneous burning of the bricks.

The amount of air admitted to the fuel, and to the ash pit, as well as at the end of the channels, is regulated by iron doors and dampers. The gases from the kilns are discharged into a common channel and thence into the chimney.

At Hörde they use Mendheim's annular kiln,[2] differing from the ordinary kiln only in having a bottom of magnesia bricks. It has 16 chambers, each holding 6000 bricks. Each chamber is fired for 17 hours.[3] The consumption of fuel is only 40% of the burned bricks. It has also been attempted to make the brick kilns wholly of basic material by tamping it in; the greater durability does not however counterbalance the higher cost.

If fragments of quartz or other foreign substances are observed they can be picked out from the burned dolomite better than from the raw dolomite. This should be done before the material is finally pulverized.

Utilisation of the Bricks.

Although the basic bricks made according to Thomas's second patent can be advantageously used, yet they are

(1) The arrangement is the same as for heating castings.

(2) Built for burning the magnesia bricks to be described later.

(3) For bricks of magnesium hydrate only 12 to 15 hours (compare p. 44).

costly, and furthermore are not easy to set. The explanation is as follows: In spite of the intimate mixing with clay, the dolomite frits completely only on the surface of the bricks. There is thus formed a sort of dull glaze, which protects the bricks from the action of the atmosphere. But the changes of temperature to which the bricks are subjected crack this glazing. Carbonic acid and water enter and decompose into carbonate and hydrate the unfritted interior of the bricks. Even on storing the bricks for a long time in a closed room the glazing breaks away, and then they fall to pieces.

A second disadvantage is the shrinking of the bricks, amounting at times to 50% by volume. When the bricks are used, one must either employ a great deal of mortar, and thus weaken the structure, or grind the surface of the bricks, and thus destroy the exterior fritting. Bricks made of raw dolomite shrink a great deal more than those made of calcined dolomite, yet the alteration in shape is even here considerable.

In order to be able to keep the bricks for some time they are warmed and plunged into tar. This indeed protects them from moisture but does not prevent their falling to pieces after a while.

Total Consumption of Fuel.

The total amount of fuel consumed in burning the dolomite and the bricks varies considerably in different works. Thomas himself[1] estimated the consumption of stone-coal in a reverberatory furnace at 85, 100, 110, 200, 300, and 350 per cent. by weight of the manufactured bricks; of coke in a shaft furnace at 75, 90, and 105 per cent. He thinks the average consumption of stone-coal will be 120%, and of coke 90.%

Many experiments have been made to use other sintering materials in place of an alkaline silicate or aluminum silicate. But none have been successful either in reducing

(1) Iron and Steel, 1881, II.

the amount of fuel necessary, or in diminishing the shrinking of the bricks.

DOLOMITE.

What may be termed normal dolomite consists of one molecule each of calcium and magnesium carbonate, (Ca CO_3 + Mg CO_3) with 54.3% of the former and 45.7% of the latter. Other varieties have 2 Ca CO_3 + Mg CO_3, or 3 Ca CO_3 + Mg CO_3, and so on till we arrive at pure calcium carbonate without any magnesium carbonate.

Dolomite occurs extensively in all the geological formations, more especially in the older formations and down to the Jurassic, but is never found quite pure. The carbonates of iron and manganese are mixed with it in various chemical combinations (even to spathic iron itself), and there are also mechanical admixtures of free silica in the form of quartz, silicate of alumina, oxide of iron, hydrated oxide of iron, and organic substances (coal, bitumen). The content in clay also determines a number of other varieties of dolomite, until we have marl itself (*Mergel*).

Dolomite suitable for the basic lining of a Bessemer converter must be as pure as possible, if it is to receive an addition of clay. Homogeneousness of composition is the most important consideration, and as dolomite seldom occurs in nature thoroughly homogeneous, it must be hand-picked. This is most easily accomplished after the first burning. Suitable dolomite occurs widely distributed, but only a few deposits are favorably situated as regards transportation.

The following table gives the composition of the various dolomites used in actual practice or experimentally. The analyses are arranged according to the percentages of magnesia. Dolomite, however, is so widely distributed that some of these here quoted are no longer used.

The dolomites richest in magnesia, which are used at Oberhausen, come from the Lahn district:—No. 1 from Diez, No. 2 from Staffel, No. 3 from Limburg, but others from that district are poorer, as No. 6 from Hadamar. No. 4, used at Bochum, is presumably from a bed similar to the

ANALYSES OF DOLOMITES.

	1	2	3	4	5	6	7	8	9	10	11	12	13	14	15
Lime	30.57	30.79	31.49	31.62	29.86	32.30	31.36	30.12	30.09	28.52	35.77	40.00[7]	42.83	43.08	45.70
Magnesia	20.99	20.82	20.53	20.19	20.17	19.35	19.28	19.21	19.12	17.56	15.82	9.00	8.38	7.57	4.91
Protoxide of Iron	.....	.....	.....	1.22	.....	.....	.....	0.26	1.40	1.78	0.56	.....	trace	.....	.....
Protoxide of Manganese	.....	.....	.....	.....	.....	.....	.....	.....	.....	.....	0.04	.....	.....	.....	.....
Carbonic Acid	47.10	47.08	47.32	45.35	45.64	46.66	45.86	44.97[6]	45.59	43.05	45.89	41.30	42.85	42.18	41.31
Phosphoric Acid	.....	.....	.....	.....	.....	.....	.....	.....	0.03	.....	.....	.....	trace[9]	.....	.....
Silicic Acid	.....	.....	.....	1.70	4.34	1.09[4]	2.00	1.35	3.04	6.52	.....	5.00	0.44	2.06	1.68
Alumina	.....	.....	.....	0.09	.....	.....	1.50	2.05	0.73	2.57	1.05	5.00	0.12	1.03	1.88
Peroxide of Iron	0.86[1]	0.84[2]	0.51[3]	.....	.....	.....	.....	.....	.....	.....	.....	.....	0.66	.....	.....
Peroxide of Manganese	.....	.....	.....	.....	.....	.....	.....	.....	.....	.....	.....	.....	.....	.....	.....
Water	0.48	0.47	0.15	.....	.....	0.63	.....	2.00[5]	.....	.....	.....	.....	4.51[8]	4.08	4.36

([1]) Including 0.44% of Clay and Sand. ([2]) Including 0.35% of Clay and Sand. ([3]) Including 0.13% of Clay and Sand. ([4]) Including 0.46% of Clay and Sand. ([5]) Including 1.24% of Combined Water. ([6]) In addition also 0.003% of Sulphuric Acid. ([7]) Average. ([8]) Including Organic Matter. ([9]) Also a trace of Alkalies

Lahn deposit; No. 5 (Trier) is used at Creuzot, No. 7 at Hörde, No. 8 at Peine; No. 9 is used in the basic brick works at Duisburg; No. 10 shows the composition of the dolomite used at Middlesbrough; No. 11 is a dolomite experimented with in Thuringia, and comes from Liebenstein; No. 12 is used at Alexandrowsky near St. Petersburg; No. 13 at Rotheerde near Aachen; No. 14 is dolomite from Upper Silesia, used at Wittkowitz as addition to limestone; Nos. 12 to 15, are really limestones, and can hardly be termed dolomites.

Alteration of Dolomite in Burning.

The essential change which dolomite undergoes in burning, is the loss of the hygroscopic water, of the water combined with oxide of iron and silicate of alumina, and of the carbonic acid combined with lime, magnesia, and the protoxides of iron and manganese. For driving out the hygroscopic and combined water a very moderate temperature is sufficient, but for getting rid of the carbonic acid completely a pretty high heat is required, about 1000° C. (2100° F.). The higher the content in magnesia, the higher is the temperature required for driving out the carbonic acid. A further chemical change takes place at still higher temperatures through the fritting of the dolomite, i. e., by the fusion of the silicate formed. It is in this reaction that the clay in the dolomite plays an important part.

Pufahl, assistant in the iron-laboratory of the School of Mines at Berlin, found that of the 0.12% of alumina in No. 13 (dolomite from Rotheerde) 0.08% was insoluble in hydrochloric acid, while the alumina in the burned dolomite was soluble. The clay was decomposed by burning. This decomposition can occur in actual practice only if the pieces of dolomite are heated homogeneously throughout.

It is on this account that it is so difficult to burn the bricks direct: one must first burn the dolomite and then make the bricks. But when dolomite is burned, and therefore sintered a little, it is difficult to handle, and the manufacture of suitable bricks from burned dolomite is often wrecked on this very point.

Experience of this kind has led to the use of the tar-method, to be described later. Before this subject is taken up, however, there should be some mention of the use of other primary materials, and other substances employed for sintering, which have been tried, and, in part, have worked their way into practice.

MAGNESIA, LIME, STRONTIA, BARYTA, AND ALUMINA AS PRIMARY MATERIALS.

Although dolomite, which in both of Thomas's patents is of the first importance, is also the fundamental material in the preparation of all basic bricks, yet there has been no lack of experiments for substituting in its place other fire-proof substances of equal basicity. Experiments have been conducted with magnesia, lime, strontia, baryta, and alumina.

Magnesia.

Magnesia occurs in nature not only as dolomite, but also and generally as a silicate of magnesia, and therefore unsuitable for "basic" purposes. Only in magnesite (carbonate of magnesia) does it occur pure, as the following table shows:

	a	b	c	d
Magnesia,	47.18	45.44	45.98	44.98
Lime,	trace	0.34	0.64	1.69
Protoxide of Iron,	—	1.83	1.40	1.63
Carbonic Acid,	51.75	51.35	52.06	50.57
Water,	0.28	—	—	—
Silica,	0.21	0.75	0.21	0.13
Alumina,	0.21	—	—	0.84
Peroxide of Iron,	0.40	—	—	0.29[1]
	100.03	99.71	100.29	100.13

These are all Styrian magnesites, *a*, very free from lime, *d*, containing more lime, *b*, of dark color, *c*, of bright yellow

(1) Protoxide of Manganese.

color. Such pure magnesites are seldom found; they generally contain far more silica; as, for instance, Silesian magnesite with over 9½%, and Eubœan magnesite with an average of 4%. When magnesia bricks were first made, however, 5% and more of clay was mixed in.

The magnesia bricks, made by Tessié du Motay, (e), and at Dux, (f), had the following composition:[1]

	e	f
Magnesia,	87.80	81.62
Lime,	3.18	7.62
Silica,	6.87	5.86
Alumina, oxide of iron, etc.,	1.86	5.50

Experiments have been undertaken to prepare pure magnesia, dolomite being first employed. G. d'Adelswärd in Paris (D. R-P. No. 11321), proposed to dissolve dolomite in hydrochloric acid, and precipitate the magnesia, as hydrate, with lime. It was soon found, however, that this method was too costly to carry out in practice.

The second material used was the magnesia already in solution in the waste liquors obtained at Stassfurt in the manufacture of potash-salts. These had been allowed to discharge into the streams, much to the injury of the fish, etc., since they contained in a litre 372.7 grams of magnesium chloride[2] (about 3½ lbs. per gallon,—Tr.). It was of interest to endeavor to save this, not only on account of its value, but also on account of the persons that lived along the streams.

Closson's Method.—Of the many recommendations made, that of Closson was really carried out at Hörde for a while, but has been abandoned on account of its costliness, as it would seem. Closson's method has the two-fold advantage of recovering the magnesia from these waste-liquors, and of obtaining magnesia from dolomite. Manganous chloride liquors from chlorine factories, ammonium chloride solutions from ammonia-soda works, hydrochloric acid, sea

(1) *Stahl und Eisen*, 1881, p. 99; and 1882, p. 120.

(2) According to Massenez.

water, and mother-liquors from salt works (compare German patent, R–P. No. 11456), are decomposed by lime-magnesia magnesium chloride into calcium chloride and magnesium oxide.

$$Mg\,Cl_2 + \overbrace{CaO + Mgo} = Ca\,Cl_2 + 2\,MgO.$$

Crude dolomite is freed of carbonic acid by heat, pulverized and mixed with water to a milk. The magnesium chloride liquor is added, and the decomposition begins at once. The precipitate of magnesia is treated in a filter-press for freeing it of the calcium chloride liquor, and then washed with water. The magnesium hydrate thus made is very plastic, and can be formed into stone without addition of clay, heated strongly in the kiln, and used at once and directly, or it can be used in the manufacture of the real magnesia bricks, or be tamped in wherever needed.

The magnesia made at Hörde contained

	%
Magnesia,	96.60
Lime,	1.94
Silica, Oxide of iron, Alumina,	1.05

For making 2200 lbs. of magnesia, there were used 2750 lbs. of burned dolomite, and 19,250 lbs. of Stassfurt waste-liquor. A Mendheim's annular kiln was employed, and in each chamber 6000 bricks were burned in from twelve to fifteen hours, with 40% by weight of stone coal.

Scheibler's Method.—To extract magnesia from dolomite, Scheibler used diluted sugar solution. This method also was practiced at Hörde. According to it (German Imperial Patent, No. 14936), the dolomite is burned, pulverized, and mixed with water to a milk. The dolomite milk is run into a solution of molasses with 10 to 15% by volume of sugar. Soluble saccharate of lime is formed, magnesia is precipitated, and dried in a filter-press. The solution of saccharate of lime is run into iron vessels, and treated with carbonic acid, obtained from the dolomite-kilns, or, as at Hörde, treated with the waste-gases from the blast furnace

which in this way are freed of carbonic acid. The carbonate of lime which precipitates is separated by a filter-press, while the saccharate of lime solution which remains, is again used for the decomposition of dolomite, as at first. The magnesia obtained at Hörde by this method contains, after burning,

	%
Magnesia,	95.99
Lime,	2.18
Silica, Oxide of iron, Alumina,	1.47

Other Methods for Preparing Pure Magnesia.—The following recommendations have been made, but have not been practised on a large scale.

A. Rümpler, in Hecklingen (D. R-P. No. 8777), precipitates the magnesia from the magnesium chloride liquors from the manufacture of potash-salts with 0.2% by weight of lime, which has been burned and made into a milk with water. At first, on account of the content of magnesium and iron sulphates in the liquors, magnesium hydrate and a little lime hydrate are decomposed, with precipitation of oxide of iron and gypsum, while magnesium sulphate and chloride remain in solution. This liquor is decomposed with calcium chloride solution, yielding magnesium chloride and gypsum. After removal of the gypsum the magnesium chloride is decomposed with lime, yielding magnesium hydrate and calcium chloride. The former is separated from the calcium chloride, which is used again for the precipitation of gypsum.

The brothers Ramdohr in Wansleben[1] (D. R-P. Nos. 9473, 11540, and 11746) concentrate the magnesium chloride liquors to 40°–45° Beaumé. On cooling, a firm mass is formed, which contains 6 atoms of water for 1 atom of magnesium chloride, and holds sodium and potassium chlorides, and magnesium sulphate as impurities.

(1) Kerpely, *Fortschritte*, 1879-80, p. 241.

To this mass is added the necessary amount of clay to give it plasticity. It is then mixed with pulverized iron ore and formed into bricks. These are burned with an oxidizing flame at such a temperature that the chlorine is evolved partly as hydrochloric acid and partly as ferrous chloride. Steam assists the process.

G. Eschellmann in Manheim (D. R–P. No. 17058) obtains soluble magnesium sulphate and hydrate by a method for the manufacture of hydrochloric acid from basic magnesium sulphate by boiling with water.

The magnesium chloride liquor is first evaporated to a syrupy consistence with calcium or magnesium sulphate, and then heated to redness until basic magnesium sulphate remains.

Utilization of the Magnesia.—Magnesia prepared in the wet way is freed of its water of hydration by heating to faint redness. It has the advantage over that prepared by heating the carbonate in being far more plastic. It can be easily made into bricks, and these do not shrink in burning as much as dolomite bricks do.

In spite, however, of the cheap material from which they are made, basic products of magnesia are too costly. The attempts to manufacture magnesia in the wet way have been abandoned, although it would be of the greatest importance from the standpoint of national economy to be able to use a part at least of the Stassfurt liquors.

Magnesia is the most infusible of all basic materials, not only alone, but also in contact with clay or quartz. Bischof[1] has communicated the results of some very instructive experiments with magnesia. He shows that magnesia alone or in contact with clay is infusible at the melting-point of wrought iron,[2] or even of platinum,[3] while with lime at the melting-point of wrought iron it shows signs of incipient fusion. A mixture of equal parts of magnesia and silica at the melting-point of wrought iron shows evident

(1) Kerpely, *Fortschritte*, 1879–80, p. 242.

(2) 1600° C. (3392° F.)—Tr.

(3) 2000° C. (4240° F.)—Tr.

fusion; with alumina it is infusible; with phosphoric acid somewhat more easily fusible; with oxide of iron magnesia is more difficultly fusible than with lime. Bischof's results agree with Plattner's rule, that the fusibility of a substance increases with the number of elements present, so that so far as fusibility goes dolmite is a more unsuitable basic material than magnesia. It is therefore to be recommended not to abandon the attempts to utilize the magnesium liquors from the manufacture of potash salts, but to prosecute them to economic results.

Lime.

Where pure dolomite (or magnesite, Tr.) is not at hand we may look to limestone for furnishing a suitable material. As will have been seen from the table of analyses of dolomites (p. 40), some of them are really limestones, and since they have proven to be applicable in practice, we may suppose that pure limestone can also be used. When we consider that among the limestones of the older formations there are a number which contain from 98 to 99% pure calcium carbonate, it is evident that it is often easier to get limestone than it is to get dolomite.

There are two establishments which have used pure limestone successfully, Witkowitz in Moravia, which at first used the low-magnesia Silesian limestone, an analysis of which has already been given, but which now uses only limestone, and Kladno, near Prague, in Bohemia.

The limestone used at Witkowitz still contains about 3% of magnesia, as the following analysis shows;

	%
Lime,	47.46
Magnesia,	2.93
Protoxide of iron,	3.41
Protoxide of manganese,	0.29
Carbonic acid,	42.85
Silicic acid,	2.48
Alumina,	0.53

The limestone used at Kladno is almost free from magnesia, and contains, after burning, 5 to 6% of silica.

The limestone must be treated just as dolomite is treated, i. e. it must be burned "dead" in shaft or reverberatory furnaces at as high a temperature as possible, and must not come in contact with siliceous substances. The shaft furnaces must therefore be lined throughout with a basic substance; the reverberatories, at least on the bottom. This precaution is more necessary in the case of lime than with magnesia, since lime forms with silica much more fusible compounds than magnesia does.[1] As a general rule, lime also fuses with alumina and oxide of iron far more easily than magnesia with alumina and oxide of iron, and on this account compares unfavorably with magnesia.

At Kladno the limestone is burned in reverberatory furnaces. Each chamber has its own grate, and holds 11,000 lbs. of raw stone, burning 46 to 48 hours and consuming 200% of the burned lime in stone-coal. The bottom of the chambers is lined with dolomite from Duisburg, the walls and arch with acid fire-bricks, separated from the bottom by a layer of coke and tar.

Lime bricks have the notable disadvantage, as compared with magnesia bricks, of absorbing water much more readily, and then falling to pieces. A lining of magnesia allows even a cooling off by sprinkling with water, but a lime lining does not. Burned dolomite occupies an intermediate position, its non-absorption of water increasing with the content in magnesia. The non-absorption of water increases also with the sintering, i. e. with the increase in silica and the temperature of burning. Herein lies the advantage of dolomite, although on account of its containing two earthy bases (lime and magnesia), other things being equal, it sinters more easily.

Phosphate of Lime.

Since in the process of dephosphorizing iron the oxidation of the phosphorus is not due to the earthy bases, it is

(1) Bischof in Kerpely, *Fortschr.*, 1879–80, p. 243.

of no consequence whether the lining contains phosphoric acid or not. Proceeding from this standpoint it has been proposed to use, in place of lime, calcium phosphate in the form of bone ash or of phosphorite, both of which are fire-proof. These substances, however, are not plastic, and even at a high temperature do not sinter sufficiently, so that they need a binding and sintering material. It has been attempted at Hörde (D. R–P. No. 13614) to use calcium phosphate mixed with clay, tar, or asphalt, and at Königshütte (D. R–P. Nos. 11360, 13086, and 16510) with chlorides of the alkalies and alkaline earths, alkaline carbonates, or caustic alkalies. Magnesia, however, gives with phosphoric acid a much more fusible mass than with silica,[1] while lime and phosphoric acid fuses even more easily, so that the result must be more unfavorable than by the use of basic masses sintered through the formation of a silicate. In the second place bone ash is costly, and phosphorite is generally too impure to be used without seriously affecting the durability of the fire-proof material made from it.

Strontia.

Strontianite (strontium carbonate) is found in large quantities only in Münsterland (Westphalia).[2] Strontia is made from it by driving out the carbonic acid by heat.

The use of strontia for making basic linings was proposed by Stöckmann (D. R–P. No. 24226). The raw or burned strontianite[3] was to be mixed with clay or clayey iron ores, so that the bricks should not contain over 10% of silica. To protect them from moisture the bricks were to be covered with fine clay or powdered clay iron stone.

So far strontianite has no advantages over magnesite or limestone. It is more costly than dolomite, and more easily fusible than magnesite or limestone. With the ex-

(1) Bischof's Investigations. Kerpely, *Fortschritte*, 1879–80, p. 242.

(2) *Verhandl. d. Ver. z. Bef. d. Gewerbfl. Sitzungsber*, 1882, p. 120.

(3) Containing generally from 95 to 96% strontium carbonate.

ception of certain local conditions, which at the present time seem to be limited to some Westphalian works, strontia does not appear to be of much use in the manufacture of basic linings.

Baryta.

Baryta has also been proposed as a basic lining. It could be obtained only from witherite (barium carbonate). But since witherite is far more fusible than strontianite—melting before the blow-pipe to a clear glass—its use in the Bessemer converter is not to be thought of, even if it occurred more frequently than is the case.

Alumina.

Pure alumina, i. e. free from silica, occurs only in beauxite.[1] At Gutehoffnungshütte in Oberhausen it has been sought to use it instead of dolomite (D. R-P. No. 9701). It was soon found that the pieces of beauxite[2] (of the size of one's fist) which were strongly heated in a reverberatory furnace were not plastic, and therefore would have to be mixed with some binding material before they could be used in the manufacture of a basic lining. Of the materials used for this purpose, raw beauxite, burned lime or dolomite, and clay, only the last proved to be suitable.

The mixture of beauxite and clay is kneaded with water, tamped into position, or made into bricks. The bricks are thoroughly dried, and then burned for 36 hours in a basic lined furnace at a bright red heat.

The greatest obstacle in the way of using alumina is the difficulty of obtaining pure beauxite. It can scarcely be had in large quantities except from Beaux. When it contains a considerable amount of silica and oxide of iron, as is the case with most of the German beauxite, it becomes very easily fusible. Beauxite alone fuses with great difficulty.

---

(1) *Abthl.* II., p. 564.

(2) Kerpely, *Fortschritte*, 1879-80, p. 243.

METALLIC LININGS.

Oxide of Iron.

Oxide of iron as basic lining for the Bessemer converter was first proposed by the author; but the difficulty of making from it a durable lining without adding other substances, such as clay, quartz, etc., which detract from its fusibility, has limited the experiments. Oxide of iron can be used in the form of the so-called purple-ore, which is obtained in the roasting of pyrite (for making acid, Tr.) by treating the residue with salt liquor for removing the rest of the sulphur and the copper. It can also be used in the form of hematite (iron glance, specular iron). But even if the fusing point of pure oxide of iron is not below that of magnesia and lime, yet the fact that small quantities of magnetic oxide, phosphoric acid, and especially silica, depress the fusing point considerably, argues against its use, particularly since better materials have been found.

Oxides of Manganese.

The part which these play in Krupp's dephosphorization refining process has already been noticed. As regards the fusing point, they are far inferior to oxides of iron, and can hardly be considered in connection with lining a Bessemer converter.

Metallic Walls.

Metallic walls without a lining can be used if cooled sufficiently. In a Bessemer converter constructed with double walls and cooled with water, a crust of the materials, or of the product, would form, that would resist all further influences. As is to be supposed from physical and chemical reasons, the best material for vessels in which a substance is to be fused is generally the substance itself.

The difficulty of carrying this out practically, has limited the experiments, in spite of the numerous proposals which have been made for many years by the author in his lectures. It is in fact difficult to give advice, when one considers that by the accidental breaking away of the crust the

fluid metal would come in contact with the walls, steam would be evolved from the water-jacket, and explosions might follow. The action in fact would be similar to that following the breaking off of boiler-scale. We are however learning to avoid the danger of explosions in water-jacketed cupolas and blast furnaces, so that we may also learn how to avoid them in such a Bessemer converter (compare D. R–P. No. 23309).

Carbon Lining.

Osann, at Düsseldorf (D. R–P. No. 1325), thought he could make from carbon a lining, not indeed basic, but still indifferent.

He mixed coke, free from ash, or retort-graphite with 5 to 10% of asphalt, and gave the mass sufficient plasticity by means of tar-oil, petroleum, or syrup. But experiments with the ordinary Bessemer process had already shown that carbon lining was unsuitable, because it was too quickly attacked and consumed. There was of course reason to expect another result with the basic Bessemer process. No experiments, however, seem to have been made with Osann's carbon lining, although it would be very interesting. The steady production and reproduction of high-carbon iron however is against the probability of a favorable result.

Sintering Material.

It has been already shown that alkali silicate did not prove to be a good material, and that Thomas chose aluminum silicate; and this has remained the best down to the present time.

It was soon found that the oxide of iron, thought to be necessary for the acceleration of the sintering, detracted from the durability of the lining.

In the absence of oxide of iron, the very high temperature required for sintering, by forming an alumina-lime-magnesia silicate, has led to many experiments for using some sintering material other than oxide of iron. The

most detailed investigations in this direction have been carried on by Althans, in Breslau, in connection with the Königshütte and the Laurahütte (Junghann and Uelsmann —D. R-P. Nos. 10411, 11561, 11539, 13593, 14971, 15510).

They communicate the following observations: "The carbonates of the alkaline earths, i. e. carbonate of lime and (although less completely) carbonate of magnesia with equal equivalents of calcium chloride melt at a red heat to a homogeneous clear fluid. If this fused mass be now raised to a white heat it evolves gas and sets to a firm, infusible body. If the lime or magnesia is in excess so that the binding material forms about 5% of the whole mass, the mixture frits together to a solid mass. In this operation the volume of the original mass is lessened by about 50%. The mass either forms a solid, close-grained body, when burned magnesia is used, or when raw lime and dolomite is used, it is porous, though preserving its exterior form, and pulverizes to a heavy powder. If this powder be heated to a white heat with a small quantity (1 to 2%) of calcium chloride it frits together, without shrinking, to a firm, infusible mass."

"With these facts before us, in making basic fire-proof bricks we have used pure (or as nearly pure as was possible) natural, or prepared, carbonates of the alkaline earths or the earths themselves, namely limestone, dolomite, or magnesite. If the limestone or dolomite contains more than 2 to 3% of silica or clay, the bricks do not stand the fire so well. If limestone or dolomite is used, it is not burned; the magnesite is burned in an ordinary lime-kiln to render it more easily pulverizable. The material is mixed with 5% of calcined soda, and ground to pass a sieve of 8 meshes per cm. From this powder chamotte is made, which serves for the manufacture of the bricks."

"The material thus prepared is moistened with just enough water to enable it to ball slightly in the hand, and is then formed into bricks in an ordinary brick press. If burned magnesite has been used, it is allowed to stand some days before pressing into bricks. No moisture must appear by

pressing, otherwise the amount of binding material to be added would have to be lessened. The bricks formed in this way are thoroughly dried, and then heated to whiteness in an ordinary brick kiln. They lose about 50% by volume, and suffer such an alteration in shape as to unfit them for direct use, so that they are classed as chamotte, and serve for the manufacture of the final product."

"The form in which this intermediate product is obtained is of no consequence. It is therefore unnecessary to bestow any especial care on the arrangement of the chamotte in the kilns. It can even be heaped up in the kilns so as to utilize all the space obtainable. The pieces are cracked and deformed by the strong contraction taking place at a white heat."

"The burned chamotte is mixed with about 10% of tar free from water, and 1% of calcined soda, and ground in an edge-mill to a suitable fineness, 8 meshes per cm. The final bricks are moulded from it under a pressure of several atmospheres."

"Bricks of magnesia can be burned in an acid lined kiln, but lime or dolomite bricks require that the bottom of the kiln be basic. The best bottom is made of magnesia bricks already burned."

At first (D. R–P. No. 10411), the inventor of this method was satisfied to use the aqueous solutions of alkalies and alkaline earths for moistening the material. He afterwards added fluorides (fluorspar and cryolite) as fluxes to the earthy-carbonates, then alkaline carbonates, and finally caustic alkalies. Experiments showed that in spite of the great volatility of the alkaline chlorides, the burned bricks still contained them in evident amounts; in our opinion, a proof of the difficulty of raising the interior of firmly kneaded or stamped masses to high temperatures.

It was soon found that this sintering material accomplished the purpose incompletely, so that the inventor began to mix in tar in the manufacture of the bricks. But this also failed, for when only 2.5% of calcined soda was added to the dolomite or magnesite, the cost of the bricks per hundred pounds was increased by about 34 cents (3

marks per 100 kg.), which is saved by the simple "tar-method" to be described later.

Borsig's proposition (Patent No. 12196) to use boracic acid, borax, or boracite (borate of magnesia), for sintering, also increases the cost of basic bricks unnecessarily, as it requires 2 to 2.5% of crude boracic acid, or 3% of boracite.

All sintering materials, which essentially diminish the fusing point, are to be thrown aside. When such are used, the sintering is not homogeneous, and flaws (honeycombs) are formed which detract from the durability of the lining.

To the list of such false-sinterers are to be added the metallic oxides, as minium, litharge, manganese ores, patented by the Bochum Mining and Steel Association (*Verein für Bergbau und Gussstahlfabrikation*, Patent No. 10683). The oxides of iron are also injurious when used in any but very small quantities. The use of ready formed easily fusible silicates, such as iron silicates (slags), as well also as blast-furnace slags free from iron (lime-alumina-silicates), is not less devoid of success.

PLASTICITY.

After it was found necessary to burn the basic materials "dead" (i. e. to sinter them), whether dolomite, magnesite, or limestone was used, it then became necessary to find some substance which would render the mass plastic, so that it might be tamped, or made into bricks.

Clay was the first thing thought of, and the methods by which it could be mixed with burned dolomite or limestone for brick-making have already been given.[1] The high temperature, however, which was required for fritting the mixture, after the sintering material was added, led Thomas, indeed even his predecessors, to consider the use of some carbonaceous material, which, while conferring the necessary plasticity, would not require so high a heat for binding the mass together. Of all the substances tried coal-tar alone has remained in use.

(1) Middlesbrough lining: Lime, 49.92; magnesia, 30.72; alumina, 4.50; oxide of iron, 3.46; silica, 11.41.

Manufacture of Basic Bricks with Tar.

The Tar.

Tar is the easily condensable viseous substance remaining from the distillation of natural fuels. It consists, for the most part, of hydrocarbons, and has generally a dark to black color. It is a complex body, containing, besides hydrocarbons, other substances yielding oxygen, nitrogen, and sulphur.[1]

The content of these latter substances determines the difference between the various kinds of tar. Water is also to be included among the substances containing oxygen, and on distillation it carries over with it various bodies, partly of an acid and partly of an alkaline nature. Thus, when wood is distilled, the water given off contains principally acetic acid, and also methyl alcohol and acetone, while that from coal (stone-coal)[2] contains ammonia. The distillates other than water are also of various kinds. Those of wood and the younger coals yield hydrocarbons which belong to the fatty group, while those of the tar from the older coals, especially stone-coal (*steinkohle*) give hydrocarbons of the aromatic group. The younger coals, peat, and younger brown-coals, comport themselves like peat, the older brown-coals like stone-coal.

The residue left on distillation and the permanent gases are about the same in all these cases.

It is a striking fact that although the carbonaceous residue is all that remains in the manufactured basic bricks, yet only the tar from stone-coal can be used.

This is to be explained apparently by the acid nature of the other tars, namely, wood-tar, which has an injurious effect upon the alkaline earths, forming acetates. It may be due also to the greater stability of the aqueous compound in the tar obtained from the younger coals.

---

(1) *Die Industrie der Steinkohlentheer-Destillation*, by Dr. George Lunge; and Wagner, *Handb. d. Chem. Technologie.*

(2) Note by Translator. The stone-coal referred to is not to be confounded with anthracite, as it is merely a hard, bituminous, or semi-bituminous coal.

Tar from brown-coals contains[1] a third (33%) of ammoniacal-water, the greater part of which goes off at from 60° to 80° C, but a small part requires a temperature of 200° C.[2]

The tar used in the manufacture of basic materials must be free from water, as the water would form a hydrate with the lime, and cause the material to fall to pieces. As to the amount of water in tar from stone-coals, the reports are quite diverse. This appears to depend not only upon the kind of coal from which the tar is obtained, but also upon the temperature at which the distillation is carried on. Wurtz[3] gives 6% of ammoniacal water in English coals, and 9% in Silesian coals; the smelting-works, on the contrary, 12% and 18%.

Lunge has discussed in detail the dehydration of tar from stone-coals.[4]

A great part of the ammoniacal water separates from the tar on long standing and can be drawn off from the surface. It can however be more easily separated by heating the tar, whereby it (the tar) becomes thinner. This operation is best carried on by the use of a steam coil, a temperature of 16° to 21° C. being sufficient, the purpose being entirely accomplished at a temperature of 40° C. A higher temperature however appears to be required for getting rid of the rest of the water, as for instance from brown-coal tar.[5] The tar is boiled in open vessels, a method incomplete, dangerous, and disagreeable to the neighborhood.

It is difficult to explain why the smelting-works do not employ the method used in the roofing-paper factories, where the tar is dehydrated in steam jacketed cylindrical vessels, or by a steam coil. The advantage of this method

---

(1) Wagner, *Handb. d. Chem. Technologie*, 1880, p. 854.

(2) On carrying the residue to dryness some water is still given off, arising from the decomposition (oxidation) of the oils.

(3) Op. cit.

(4) Op. cit., p. 84.

(5) Tar from Zeche, Holland, contains 6.33% of ammoniacal water; at 150° C. 7.20%; at 210°, 7.65%. (*Glückauf*, 1883, No. 65.)

is that, in addition to the water, naphtha is also obtained in the condensers.

The tar kettles in smelting-works are heated by stone-coal burned on a very primitive grate, the gases and vapors being carried into the chimney through hoods.

Mixing the Dehydrated Tar with the Basic Materials.

The tar is drawn out of the kettle through a cock, or ladled into the mixing trough. The arrangement at Rotherde near Aachen for handling the tar is very convenient. In addition to the funnel for discharging the pulverized basic material, there is a closed vessel of iron enclosing a steam injector for creating an exhaust. By the diminished pressure thus arising the boiled tar is carried over from the vessel containing it into another placed near by. In the interior of this is a serpentine tube through which escapes the steam (brought in by the injector), which serves to heat the tar still further. When the tar is sufficiently fluid it is carried by another tube into a measuring vessel from which it flows through a cock into the edge-mill, there to be mixed with the basic material.

The mixing of the tar with the burned dolomite is best done under edge stones provided with scrapers, or in vertical or horizontal mixers with axes shod with knives. This plan is to be preferred to hand-mixing, although this is still often used because it takes less tar.

Whether the edge-mill, or the vertical or the horizontal mixer is used they should be warmed while the mixing is in progress. If an edge-mill is used the bottom is best warmed[1] by steam; if a mixing machine, the walls;[2] if hand-mixing is employed, the iron plates on which the operation is conducted.

The amount of tar absorbed by the dolomite is lessened, first, by the degree of burning and sintering, and second, by the size of the particles. The more the dolomite is burned

(1) The vertical axis is revolved, or this is stationary while the bottom revolves.

(2) The knives are arranged spirally on the axis, as in the so-called clay-cutting machines.

and sintered, and the larger its particles, the less tar does it absorb. A very fine powder, therefore, takes up the most tar. The ground dolomite is sifted, and only the particles of the size of peas are used for absorbing the tar. The powder is used for mortar, the larger pieces being returned to the mill. Less tar is used the more fluid it is.

Where edge-mills are used, as at Rotheerde, it has been found best to use two: one for grinding the dolomite and one for mixing in the tar. The mixing is performed very rapidly when the tar has the proper temperature. At Rotheerde, 176 lbs. of dolomite are mixed in three minutes under edge-rollers weighing 11,000 lbs. A 20 h. p. steam-engine suffices for pulverizing, mixing, etc.

The tar is mostly measured, and there is used on the average 20% by volume of the dolomite. Taking the specific gravity of burned dolomite at 3, and that of dehydrated tar at 1.2, the amount of tar added by weight is 8%. These numbers, however, are different at the different works. At Alexandrowsky they use 17 to 18%; at Hörde 10 to 12½%; at Creusot, 10 to 11%; at Middlesbrough 9 to 10%; at Kladno, where the mixing of the lime and tar is performed by hand with a shovel on hot iron plates, 9%; at the Rhein Steel Works 8 to 9%; at Rotheerde only 7%.

Using the Mixture.

The mixture, which has been made plastic by the tar, is either used at once for the preparation of the lining, or made into bricks.

The stamping-in (tamping), described in the following chapter, (page 67), is carried on with heated stamps around forms, mostly of iron. Bricks are made in iron moulds. The moulds are made of wrought or cast iron. If the first, they corrode more quickly; if the second, they must be protected from over-heating. The moulds must be covered on the inside with some substance which will prevent the mass from adhering to them: paraffine is mostly used. This is to be done before the mass is tamped in. The tamping into the moulds must be done with heated hammers or mallets. When the mould is full, and a little

more than full, the mass (brick) is struck with the broad side of a heavy hammer and driven home.

Burning the Tar Bricks.

The bricks are brought in the moulds into the kiln, heated generally with horizontal grates, and raised to a red heat. At this temperature the tar is distilled off in twelve hours. If a lower temperature is used, as at Hörde, this operation requires forty-eight hours. The flame (from the kiln) is used for heating the kiln, thus saving fuel. The converter-bottoms, tamped to shape, are treated in the same way.

The bottoms and bricks are withdrawn from the kiln and packed on trolleys, whose upper plates close the kilns underneath. These trolleys are made so that their carrying-plate is curved to meet the walls of the kiln, the space between, should there be any, being filled with fine sand in order to make the kiln at that point gas-tight (Neunkirchen, near Saarbrücken.)

Burned in this way the dolomite is firmly bound together by the coke-like carbon that remains from the tar.

Treatment of the Bricks.

Melaun at Königshütte (D. R–P. Nos. 12562 and 12570) has proposed to make the bricks in moulds of thin sheet iron and to burn this away in an oxidizing flame. This costly method, however, has not recommended itself. It is far more customary to use strong wrought-iron or (less frequently) cast-iron moulds, and a reducing flame. These moulds can then be separated from the bricks and used again. If the bricks have been well tamped into the moulds they retain their size and shape pretty well, and do not have to submit to any further operation. If they are to be laid without mortar, their surfaces are smoothed on a rough plate of hard steel.

MORTAR.

When the bricks are not sufficiently smooth on their surfaces, or when their shape requires it, mortar must be used in building them in. This is either made in the same manner as the bricks, using dolomite powder, as already men-

tioned, or it is made from the fragments of tar bricks by grinding and mixing them with tar. Where limestone or magnesite is used instead of dolomite, the same is used for mortar. Even when dolomite is used for the bricks, burned pure limestone is sometimes mixed with tar and used for mortar. This lime-tar is an excellent material for repairing the interior of the converter, without allowing it to cool down.

SUBSTANCES OTHER THAN TAR FOR AGGLUTINATING THE BASIC MATERIALS.

The crude or burned earths (lime, magnesia, etc.), are not plastic; in order to render them so, the addition of substances other than clay and tar has been proposed, but none of them have kept their place in practice.

Carbonaceous Substances.

After Thomas had announced his discovery, Riley[1] proposed crude petroleum in place of tar. Brown, Bayley, and Dixon in Sheffield have tried, on a practical scale, 10 to 15% of this substance mixed with dolomite. Petroleum, however, vaporizes so completely on heating that it cannot be used as a binding-material.

Tar and resin-oil were proposed at the same time, but do not seem to have been tried.

Melaun (D. R–P. No. 12562) proposed blood; André proposed paste, 5 to 6 parts of meal to 100 of dolomite; Kirkpatrick, linseed-oil; Closson, glue; Ramdohr, molasses. But none of these organic substances bind as well as tar, none give so firm a carbonaceous residue, none are so cheap or so easily obtained as tar, which is a by-product from gas-works and coke-ovens.

Mineral Substances.

Clay is a good material for conferring plasticity, but does not bind so well when a sintering temperature is used. In place of it the following substances have been proposed:

Kerpely (D. R–P. No. 11348) found that dolomite which had been treated with acetic acid was plastic. Two parts

(1) Journal of the Iron and Steel Institute, 1879, p. 144.

of burned dolomite, according to him, are to be made into a pulp with vinegar, and then mixed with one part of dolomite, previously treated with vinegar. The amount of vinegar added should of course not be sufficient to bring all the lime and magnesia into solution.[1] The lime dissolved in the vinegar is so finely divided that it knits the unattacked particles of dolomite very firmly together. By this method Kerpely has made excellent specimens of bricks, but it is too costly to come into practical use.

André's method (D. R–P. No. 12250) is quite similar in its action. He adds 2% of freshly precipitated sulphate of lime to burned dolomite. The finely divided gypsum confers the plasticity.

On the same principle those methods act in which larger fragments of crude dolomite, magnesite, or lime are added in finely ground condition to burned dolomite, magnesite, or lime, or Haarmann's method which employs milk of lime as binding material. Most of these materials however fail of their purpose because they lose their plasticity as soon as the water with which they are mixed is evaporated. The rest of them act well enough until the material is burned, then they are no better than those means for accelerating the sintering which have been already criticised. It is so far clear that none of the numerous binding materials can compare with tar.

Illustration of the Treatment of Tar-Bricks.

At Hörde, according to Massenez, the basic bricks are made in wrought-iron moulds, shown in Figs. 5 and 6. The mould is filled on an iron plate. The mass is carefully tamped in and driven "home." The weight of the brick serves as a sign of the care with which this is done, as each one should weigh from 81.4 lbs. to 83.6 lbs. A good workman makes eighteen bricks in ten hours. The bricks in their moulds are brought into the kiln, where they stay six hours if they are to be taken out hot, but fifteen to sixteen hours if they are to be taken out cold. Each mould is

(1) *Zeitschrift des Vereins deutscher Ingenieure*, vol. XXVI., p. 532.

covered with an iron plate, or they are piled one on another, and only the upper sixth or seventh covered with the plate.

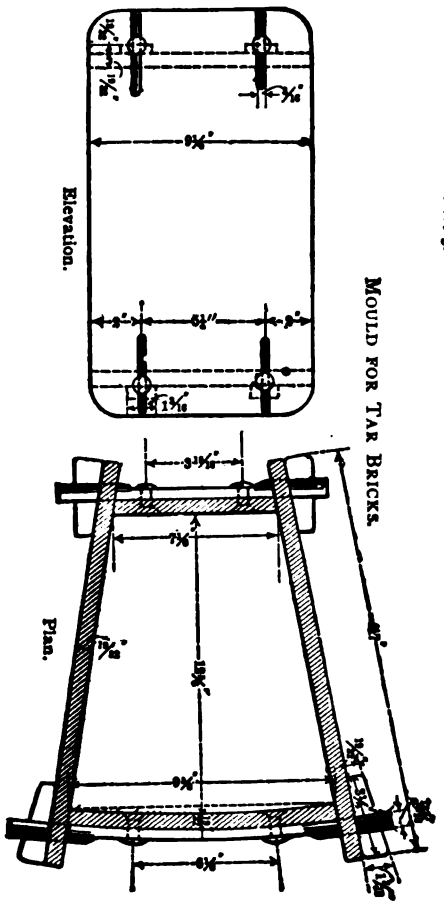

FIG. 5.

MOULD FOR TAR BRICKS.

At Hörde 420 bricks are used for the bottom of a ten-ton converter.

CHAPTER III.

CONSTRUCTION AND LINING OF THE CONVERTER.

[The numbers in brackets refer to the Notes at the end of the volume.]

THERE is no essential difference between the construction of a basic Bessemer converter and one intended for the acid Bessemer process as described in *Die Darstellung des Bessemerfrisch processes.*[1] All the arrangements which were found advantageous in the acid Bessemer process, are also requisites of the basic process.

Principal among these are the wide straight nose, allowing a good view of the bottom, the form of vessel as nearly cylindrical as possible, and the changeable bottom. Fig. 7 shows the construction of a converter with changeable bottom formerly used by the Rhein Steel Works in the acid process and now lined with basic bricks [1].

The large amount of slag resulting in the basic practice necessitates correspondingly larger converters than are required for the same charge in the old Bessemer process. The ratio is about 6.5 to 10. That is, a converter able to take 10 tons of iron in the acid process could only take 6.5 to 7 tons when used for the basic process [2].

In many cases the shells of the old acid Bessemer converters were retained for the basic process wherever they had sufficient capacity. Only few works, such as those at Peine, Hörde, Witkowitz, and Neunkirchen, have adopted entirely new constructions. These new arrangements do not, however differ so much in the construction of the converter, as in the general arrangement of the plant. Appliances providing for the rapid changing of the entire converter, which will be described later, were not adopted in practice, because the necessity for them had not been demonstrated.

Essentially different shapes of converters were made use

(1) *Abthl.* III., p. 343, *et seq.*, p. 463, and p. 906.

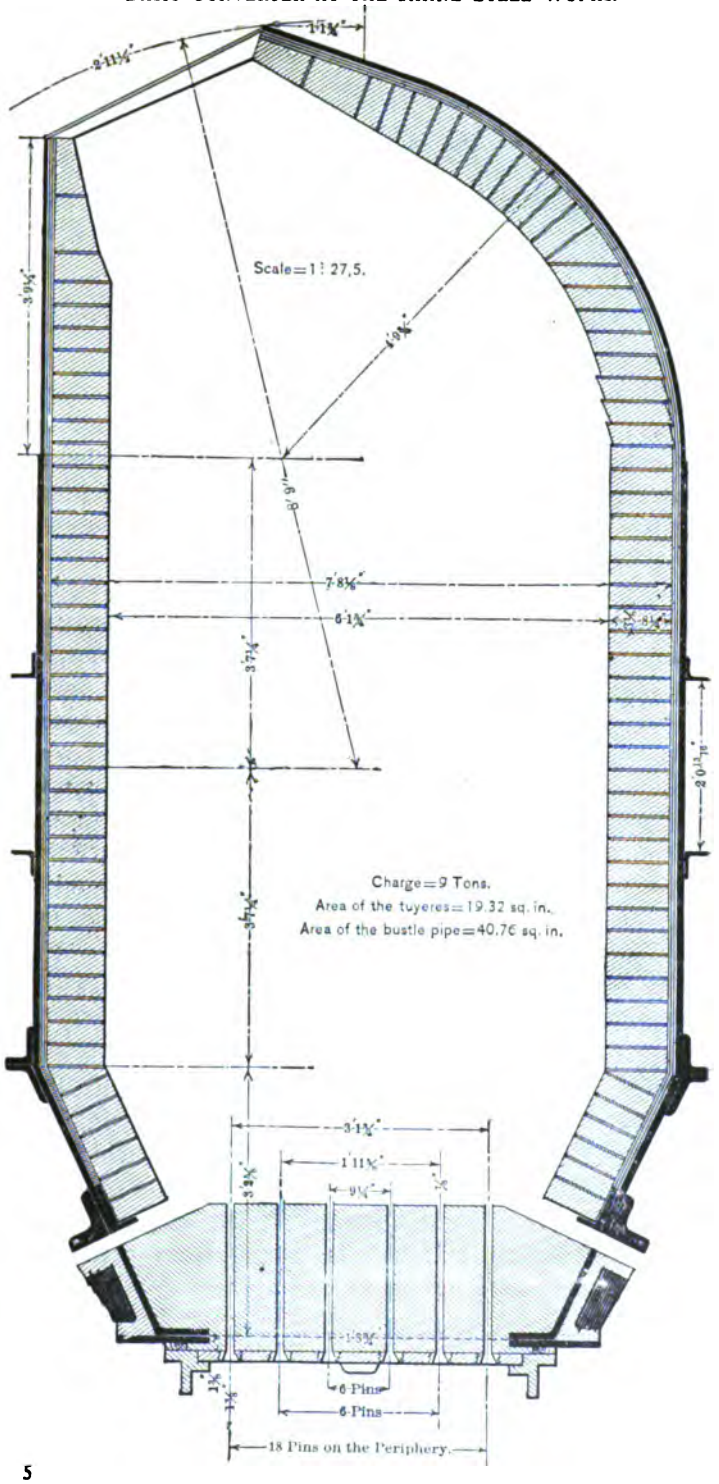
Scale=1 : 27,5.
Charge=9 Tons.
Area of the tuyeres=19.32 sq. in.
Area of the bustle pipe=40.76 sq. in.
6 Pins
6 Pins
18 Pins on the Periphery.

FIG 7.

of only at Witkowitz, Austria, and at Erimus, England. To judge these changes rightly, it is necessary to consider first the lining of a converter under ordinary circumstances, that is, without materially changing the shape of the old Bessemer converter.

In the lining of a converter, the lining of the converter proper and that of the bottom will be considered separately. In all cases changeable bottoms are used.

THE CONVERTER LINING.

The lining of the converter is either made of bricks, or it is rammed. Sometimes both these methods are used in the same converter.

The Brick Lining.

The brick lining begins at the bottom of the shell, and is supported by an angle-iron riveted to the shell. [Fig. 7]. This angle iron projects for about one half the thickness of the lining. A wider projection is not only unnecessary, but would be rather a disadvantage, since the melting of it would conduce to the destruction of the bottom joint, by the formation of slag containing ferrous oxides.

If dolomite, lime, or magnesia bricks are used without tar, the mortar consists of the same material moistened with water or better with tar. [Compare page 60.] This lining only requires pre-heating after it is done.

Tar bricks are mostly used without any mortar at all. This lining must be heated until the bricks get soft, when the joints melt together and the whole brickwork settles down and tightens the joints. Further heating distills the hydrocarbons, and hardens the brickwork again, which completes the lining, unless cracks are shown, which must be filled.

A single brick contains from 50 [English] to 75 [German] cubic inches, and weighs, burnt, from 5 to 7 lbs., air dried, 11 lbs., and green, 12 lbs.[1]

---

(1) Kupelwieser in *Oester. Zeitschrift f. Berg. und Hüttenwesen*, 1880.

The Rammed Lining.

Although the basic materials made of calcined dolomite, limestone, or magnesia, whether mixed with a small amount of clay or not, and made up with water, are plastic enough to be rammed, they do not make a very durable lining, and it is therefore preferable to make the burnt basic material plastic with anhydrous tar.

The basic material made up with tar is rammed with heated iron rammers in the space between the converter shell and an inserted wooden pattern protected with sheet iron.[8] The lining near the bottom is thicker than it is higher up (e. g. 14″ and 10″). The material is put down in very thin layers, which are rammed down until the ram-

FIG. 8.
CORE FOR REPAIRING THE CONVERTER LINING.

mer leaves no imprint on the lining. This hard surface is then scraped before a new layer is put on. [4]

A second method, as used in Middlesbrough, for instance, consists in throwing into the annular space between the converter shell and the cast-iron pattern, lumps of basic concrete. The cast iron pattern is hollow like the apparatus shown in Fig. 8, and is heated. The basic concrete is thus melted and fills the space between shell and pattern completely. Continuous firing hardens and completes the lining.

Combination Method.

Sometimes both methods are used in the same converter. The lower part of the converter is then rammed and the neck and the nose are built up with bricks.

At Oberhausen a thin lining of short basic bricks is built up next to the shell, and the remaining space between this lining and the pattern is then rammed as above.

All these variations in the methods of lining serve only the purpose of economizing in wages. The gains obtained, however, are so small, and the loss in the durability of the lining so great, that most of the works have accepted a solid rammed lining.

Other Methods.

Dering, at Lockleys, has a patent (No. 10762) on a process which consists in the use of a conical mandril. He fills the whole converter full of basic concrete, and then draws this conical mandril through it by means of steam-power. The compression thus given the material is certainly not sufficient for a good lining.

Durability of Basic Lining.

The thickness of the basic lining at the bottom varies from 8″ to 26″ and at the nose from 6″ to 18″. The lining made of basic bricks with mortar did not last more than 45 to 55 heats; the same with tar bricks, 60 to 90 heats. The rammed tar concrete lining lasts from 80 to 130 heats. Thomas himself in the year 1881 gives 50 heats as the

average durability of the basic lining. Yet there are generally obtained 100 to 120 heats[1] although it occurs sometimes, as in the acid process, that a lining gives out after a few heats, sometimes after the first heat. [6]

It may therefore be said that, as regards the durability of the lining, it meets all the requirements of continuous runs, provided the repairs could be made quickly enough. These latter, however, cannot be made as rapidly in the basic as in the acid process. To compensate for this loss of time, practice has shown that three converters must be used together.

Wasum made experiments on the durability of the different earthy bases and obtained the following results:[2]

The durability of basic bricks in dry air is in proportion to the height of the temperature at which they are burned and the length of time this temperature is maintained. Magnesia bricks fall to pieces mostly within three months. Lime and dolomite bricks after two to four weeks. The cooling with water lowers very much the life of the bricks.

Dolomite and lime break up after a few days. Magnesia bricks crack, and the cracks favor a later collapse. A small addition of clay gives the bricks more resistance in this direction. Alternate heating, and cooling with water, gives the bricks rather more resistance, so that lime bricks treated this way stand from 6 to 8 days; dolomite from 8½ to 21 days. [6]

Repairs of the Lining.

The basic lining will not be attacked chemically if there is a sufficient amount of basic additions present, as the number of heats made with the same lining proves. In spite of this, an irregular wear and tear will take place and holes and cracks be formed. These holes have to be filled out directly after the heat to prevent greater damages. It is possible to repair such places, without cooling the lining,

(1) *Stahl und Eisen*, 1885, V., p. 383.

(2) Transactions of the *Verein zur Beförderung des Gewerbefleisses*, 1884, *Abhandl.*, p. 104, *et seq.*

by use of lime tar, made by mixing dead burnt lime or dolomite with warm tar. The feebly plastic mass is charged through the nose by means of an instrument and placed on the spot which needs repairing. It softens there and becomes hard by the evaporation of the soluble hydrocarbons.

A very handy way to repair rammed linings, when much worn out, is similar to the method of lining a converter by means of heated iron forms as already described. It is patented in Germany [R–P. No. 14005] and performed as follows:—As soon as possible after the last heat, and when the converter is still hot, coke is charged into the converter, and brought to a bright heat under a slow blast. After the blast has stopped and a grate *a* [Fig. 8] put on the nose of the converter, the vessel is turned completely down, the bottom is then quickly taken off and a core, *b*, either of wrought or cast iron, in one or several pieces, is put in the converter. The outside of the core corresponds with the inside of the newly lined converter or at least with part of it. The core is so constructed that it can be heated to a high temperature from the inside. For this reason the core is either entirely or partly hollow, and is heated by the hot gases of the coke fire in the grate or by a further addition of coke.

After the core, *b*, has been put in the converter, the space between the core and the worn-out converter lining is filled up with a basic material containing just sufficient tar to keep it from binding in a cold state, and somewhat liquid when hot. The tar can be entirely or partly replaced by other materials, such as asphalt, pitch, etc., which form coke after a dry distillation.

After the space, *c*, between the core and lining, *d*, has been filled up with basic material, and, if necessary, compressed by ramming, the hollow core is filled with coke, and heated so as to make the material added, hard and solid.

The new basic material adheres well to the old, still hot, lining, because the tar cokes and binds the new lining to the old one.

The heating is continued until the temperature for coking has penetrated to the inside of the lining, the grate is then taken away, the ashes dumped out, and the core lifted out of the converter. This last operation is a good deal easier if the core is in two or more parts.

After the lower part of the converter, which has in the meantime also been repaired, is again put on, the converter is again ready for use.

The core can be taken out of the converter shortly after the filling of the basic material, and the lining hardened direct by the coke fire.

With this method the lining can be repaired in six hours without waiting for it to cool.

Influence of the Slag on the Destruction of the Lining.

The greatest destruction of the lining is liable to take place through the slag. It does not occur on the upper level of the metal bath, where the slag collects and comes into contact with the lining, but on the mouth of the converter, and on that part of the mouth, with which it is brought in contact when the converter is turned down ready to pour. The destruction is due, not so much to the direct action of the slag, as to the necessity of breaking off the lumps of slag adhering to the lining.

In some works the clogging of the nose after the first heats was so great that it was necessary to stop operations and clean the converter nose. There are many remedies proposed for avoiding this trouble. The first one tried was of a chemical-physical nature. It was intended that the slag should be liquefied through certain additions, especially sodium and potassium salts [carbonates and chlorides] and also through fluorspar. The result was unfavorable. When pig iron high in manganese was used, the troubles disappeared. For this reason an addition of manganese ore (pyrolusite) was used, but without good results. The explanation of this failure lies in the absence of the silica necessary for combining with the manganese.

A widening of the nose was next tried, but without success, for even more slag adhered. The widening of the nose diminished the pressure within the converter. It proved a better scheme to blow under heavier pressure and make a narrower nose. A very good remedy, used to a great extent, consists in making half of the nose out of clay bricks. The slag drips off these bricks, and, in case of any great accumulation, it is easy to break the lumps off without injuring the brickwork. In the acid process there is no ground for complaint on this account. At first the nose of the converter was made out of clay bricks; afterwards the ring on the level of the metal bath, and at last the two strips following the slag line when the converter is turned down for pouring. But the siliceous substances flowing back with the slag into the metal were sufficient to check the dephosphorization. It is necessary to put between the acid and basic lining a neutral layer, which consists mostly of coke mixed with tar. In spite of this, the joints were first attacked and destroyed. Later, an attempt was made to blow air in through the nose and to produce a high temperature through the combustion of the carbon monoxide of the gases and thus melt the slag. The necessary apparatus was very complicated, and the results inconsiderable. At last, it was thought a change in the shape of the converter might avoid these difficulties. It was shown that the nose kept cleaner if the converter was not turned down quite so often, on which account, as far as possible, the after-blow is regulated by time and not by sample. It was shown, also, that an accumulation of slag on the front of the nose was accompanied by a wearing away of the back. At Witkowitz they chose an egg-shaped converter, perfectly symmetrical, Fig. 9.[1] The metal is poured out alternately on the two sides, in order to melt off the slag that has accumulated. The orifice of the converter is from the first a little elliptical, keeps always the same size, and is clean enough. This arrangement avoids the slag accumulations, but has the disadvantage that all the iron and slag cinders drop on the

(1) *Stahl und Eisen*, 1881, V., p. 183.

converter shell and even on to the bearings. Therefore, this construction is already abandoned. The Erimus works chose a shape for the converter which reminds one of

FIG. 9.

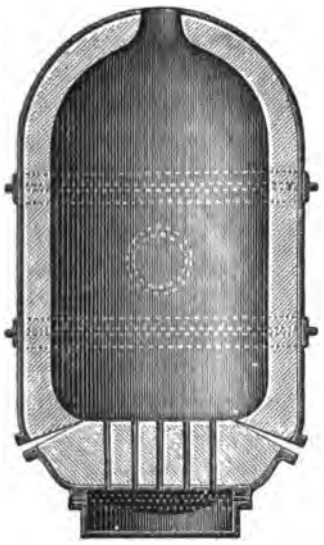

CONVERTER AT WITKOWITZ.

FIG. 10.

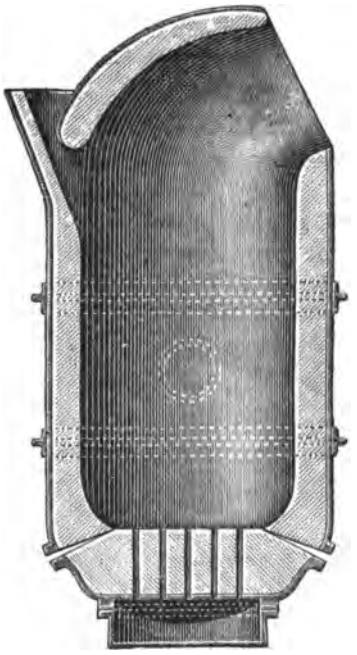

CONVERTER AT ERIMUS.

the author's first idea of dephosphorization. [See page 7.] It has a cinder notch on the back to pour out the slag without touching the orifice of the neck. Nothing was made public as to the usefulness of this arrangement, but its durability is very doubtful.[1]

None of these changes have been successful. It has been shown that if the nose was rammed very carefully with a basic concrete containing enough tar, and if a pig iron high in manganese was used, the accumulation of slag was but slight, and it could be quickly removed and the injured place easily repaired with basic concrete.

---

(1) Compare *Stahl und Eisen*, 1882, II., p. 57.

The Converter Bottom.

In the early days of the basic process great care was taken to make the bottom, as well as the tuyeres, out of basic material. Thomas used a mixture of 85 parts ground lime, 10 parts alumina, and 5 parts water-glass solution, or 94 parts lime and 2 to 6 parts powdered iron ore. But these mixtures proved entirely inappropriate. Better results were obtained by mixing an already burnt basic material. This material is ground fine, mixed with tar, and made into tuyeres. But with all these precautions and the use of the finest magnesia, as prepared by the Scheibler and Closson processes (see pages 43 and 44), leaves it still impossible to get a straight tuyere. The material warps and the grinding off afterwards would be too expensive. This is the reason why basic tuyeres are no longer used.

The bottoms are now pin bottoms, or the same tuyeres are used as in the acid process.

The ramming of a basic pin bottom is similar to that of an acid one, and made mostly after the process of Rühle von Lilienstern.[1] A separate plate, *a* [Fig. 11], containing as

Fig. 11.

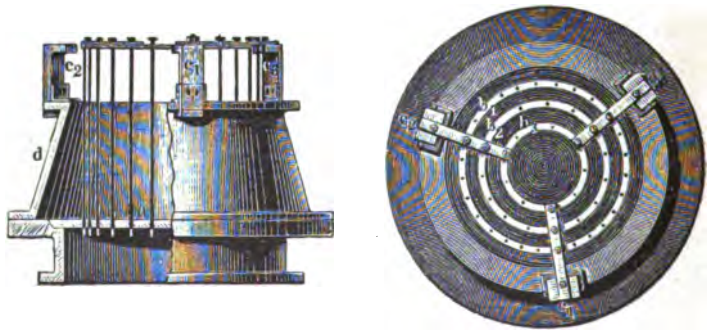

Pin Bottom.

many holes as there are tuyeres, is put in the place of the false plate in the wind box. On top of the bottom is a cross with three to four rings. These rings, C_1, C_2, C_3, have

(1) *Verh. des Verein z. Bef. d. Gewerbefleisses*, 1879, p. 316.

holes corresponding with the holes in the lower plate. Through these holes the pins are inserted. The bottoms were first made out of calcined basic material with clay or a silicate binding. At present only basic tar concrete is used.

Two kind of rammers are used: one has a rim to fit closely on the pin, the other is triangular or rectangular in shape. The shell in which the bottom is rammed is mostly of cast iron, although sheet iron is sometimes used. After the bottom has been rammed in thin layers with hot rammers, it is covered with a thin layer of sand or iron ore and put in a heating furnace to drive off the hydrocarbons. The furnace for drying the bottoms is simply a long tunnel and its base is formed by the platform of the bottom carriages. These platform plates are turned down at the sides and run through two troughs filled with fine sand. Some of these furnaces have a capacity of from 18 to 20 bottoms.

Dead-burnt lime or dolomite is used as material. It is carefully sifted to the size of peas, before it is mixed with tar (12%).

About 40 to 50 layers are used to ram solidly a bottom 16″ to 18″ thick. The number and size of holes, as in the acid process, varies considerably, as is shown in the following table:

Witkowitz	uses 35 holes	½″ to 11-16″	in diameter.
Rotheerde	uses 64 holes	9-16″	in diameter.
Kladno	uses 84 holes	⅜″	in diameter.

Basic Bottom with Acid Tuyeres.

Basic tuyeres are no longer used. They have been entirely superseded by acid tuyeres, and it merely depends on the cost, and local circumstances, if pin bottoms are preferred. The bottoms are either rammed at once around the acid tuyeres or cast-iron false tuyeres are first inserted, leaving holes open for the acid tuyeres. In either case, the bottom may be made of bricks or be rammed, or both can be combined. Brick bottoms are but seldom used, as it is

difficult to obtain bricks straight and true, and the joints are mostly too large. If bricks are used, they are laid in from two to five courses. The usual thickness of the brickwork is from 6¼ to 6½ inches.

The bottoms at Teplitz were made in the following way: The first two courses were laid flat and the remainder was formed of wedge bricks between the inclined tuyeres; six tuyeres each with 7 holes ¾″ in diameter were used.

Nearly all works ram the basic concrete direct around the acid tuyeres, which are in most cases vertical. Neunkirchen uses 8 tuyeres arranged as follows:

Hayingen uses 8 tuyeres with 13 holes each, symmetrically distributed. Witkowitz uses 5 tuyeres with 7 holes each [3 with 11/16″ holes and the other 2 with ½″ holes] and uses false cast iron tuyeres while ramming; these are taken out before the bottom dries, and the acid tuyeres are put in after it has been taken out of the furnace.

In the mixed system, the space between the tuyeres is filled out with bricks and the outer ring is rammed.

Koppmayer at Königshütte has a patent (No. 9384) for using wrought-iron pipes instead of tuyeres. Some works use a layer of beauxite, chrome ore, or magnesia to separate the acid tuyeres from the basic bottom [7].

Joining the Bottom to the Converter.

The joint between the bottom and the converter is made of fine basic concrete [Fig. 7, page 65]. The remaining outer joint is filled up with the same material.

The bottom is pressed on to the converter with an hydraulic jack. For the most part these jacks are connected to the cars instead of being stationary underneath the converter. The hydraulic bottom jacks (Figs. 12, 13, 14) are connected by means of a rubber hose with the hydraulic pressure-pipe. The jack-car has an hydraulic cylinder in its centre, supported on a heavy framework; the plunger has on top a round plate which fits in the wind-box of the bottom.

A peculiar method is used at Witkowitz for raising the converter bottoms into position. It consists of 2 rails each about 36 feet long. Each rail is in two pieces, con-

FIG. 12.

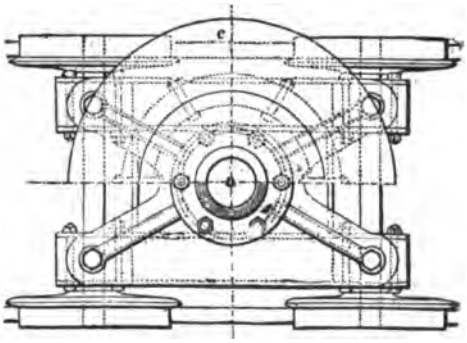

TOP VIEW AND HORIZONTAL SECTION.

FIG. 13.

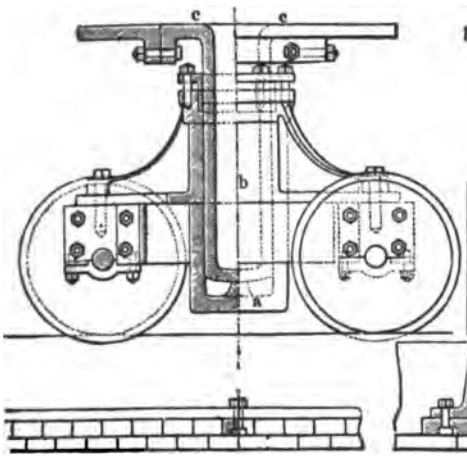

VERTICAL SECTION AND SIDE VIEW.

FIG. 14.

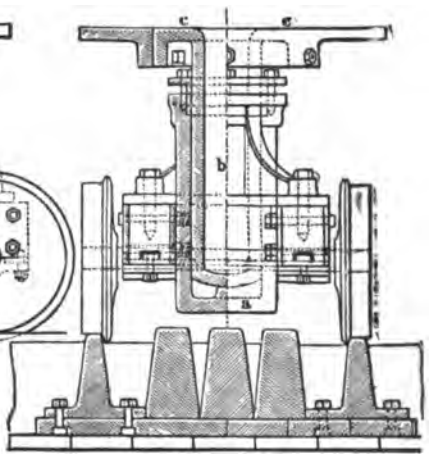

SECTION AND FRONT VIEW.

nected at the ends, and they are forced up in the centre by an hydraulic jack placed underground. This arrangement is illustrated in Fig. 60.[1] [Chapter VII.]

(1) *Stahl und Eisen*, 1881, No. 5, p. 183.

Durability and Repairs of Bottom.

The greatest difficulty in the early history of the basic process was the maintenance of the bottoms. Thomas in 1881 gave 14 heats as their average life, and various works reported from 8 to 21 heats. Hörde during that time, according to Pink, reckoned 9 heats for rammed, and somewhat more for brick bottoms. This is now surpassed: Creusot makes 15 to 20 heats, Rotheerde 18 to 20, and everywhere 18 heats are reckoned a fair average. To get these results it is necessary to examine the bottom very carefully after every heat, and repair the slightest damage. A pin bottom is easily repaired by throwing basic concrete on the injured places and keeping the tuyere holes open by inserting pins. A bottom with acid tuyeres requires the worn-out parts to be constantly changed. In Teplitz, on an average, two tuyeres are changed after every heat, and this gives the bottom a life of between 30 and 40 heats.[1] A useful tool for repairing such a bottom is shown in Fig. 15. The pins held in position by means of the bushing, *a*,

FIG. 15.

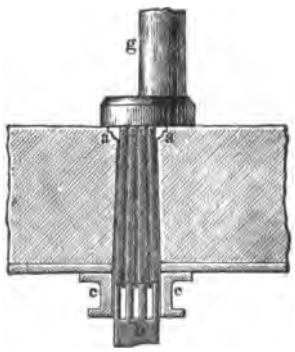

BOTTOM RAMMER.

keep the tuyere holes open and clean. The basic concrete thrown on the bottom is rammed down with the rammer, *g*.[2] [3]

(1) Iron and Steel, II., p. 458

(2) German Patent, No. 15088.

THE CONVERTER AT PEINE STEEL WORKS.

The converter used at Peine is one of the most modern and can be taken as the best example. Figs. 16 to 19 on Plate I. exhibit all necessary details and dimensions. Special attention is directed to the peculiar arrangement of the bottom, which consists of two parts. The changeable bottom proper is attached to the converter with swinging screw bolts. This bottom has in its centre a circular opening for the insertion of a plug-bottom containing all the tuyeres. This plug-bottom can be drawn out and put on without disturbing the bustle-pipe. The wind box is big enough to permit the plug-bottom to pass, and it is fastened to the wind box with keys. This arrangement gives the bottom proper a very long life. The fixed bottom, after a new plug-bottom has been put on, may be repaired by throwing basic concrete around the latter.

CHANGING OF THE CONVERTER.

The lining of a converter is mostly done when it is hanging on its trunnions. The bottoms are changeable and made in a separate repair shop. To keep the works continually going it is necessary to have three converters. The number of bottoms varies. There should be at least 6, commonly 8, and better still 10 to 12 for each converter. To make it possible to run continually the old acid Bessemer works with two converters, by the basic process, A. L. Holley proposed to remove the whole converter to a separate shop for lining. All the suggestions made for changing single parts of the converter, mostly the lower parts, which wear out quickest, have failed of success. A trial was made at Neunkirchen, but it was found impossible to separate parts without cooling off the lining and destroying a good part of it.

Melaun at Königshütte (R–P. 13966) cuts the converter into seven horizontal rings and each ring into six segments. The trouble and time which it takes to put all these pieces together is too great to overcome the disadvantage of the unequal wear and tear.

A. L. Holley's converter is illustrated in Figs. 20 and 21.

The trunnion-ring, S, of the converter is made of cast iron, and lined inside with the wrought-iron ring, R. Between converter shell, Q, and trunnion ring, R, is a space

FIG. 20.

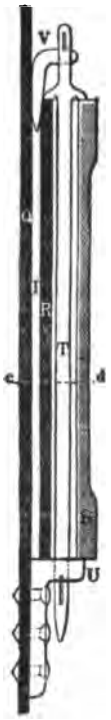

VERTICAL SECTION THROUGH A B FIG. 21.

FIG. 21.

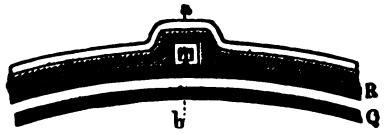

HORIZONTAL SECTION THROUGH C D FIG. 20.

FIG. 22.

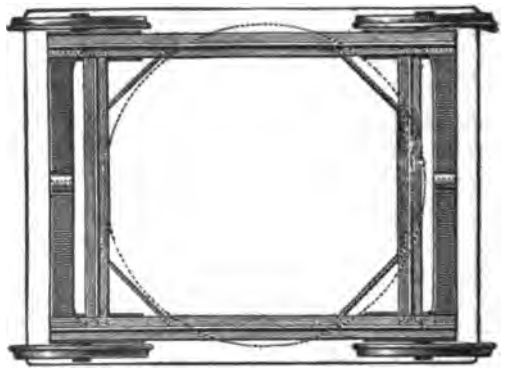

TOP VIEW OF THE CARRIAGE (HOLLEY).

of 2″. If the converter is in an upright position, it rests on the trunnion-ring with the braces, U. Side motion or turning is prevented by the keys, V. If it becomes necessary to change the converter, the first thing to be done is to take the bottom off. Then the converter is turned down, and the converter-carriage, standing on the hydraulic jack, is lifted up until it comes into contact with the converter, and lifts it sufficiently for the keys to be

removed. The converter is now disconnected from the trunnion-ring and rests on the car. It is then lowered, and both car and converter are taken to the repair shop.

FIG. 23.

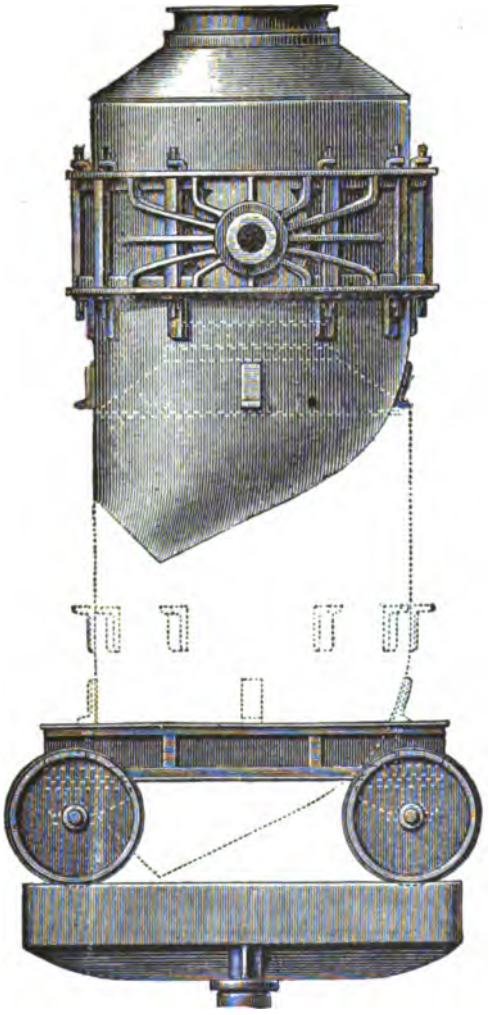

CHANGEABLE CONVERTER, AFTER HOLLEY.

It is not necessary to loosen the bustle-pipe, neither is an overhead traveller required. Justice patented a similar

construction (R–P. 13696). He brings the whole converter into a horizontal position. The trunnion-ring is in two parts [Fig. 24]. When the converter is in a horizon-

FIG. 24.

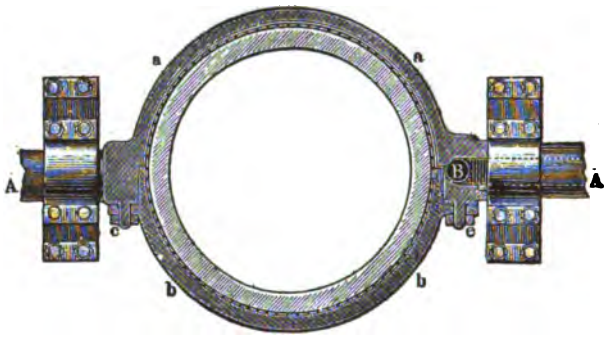

JUSTICE'S CONSTRUCTION OF TRUNNION-RING.

FIG. 25.

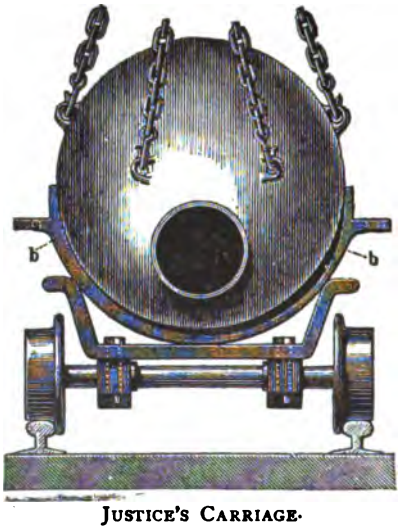

JUSTICE'S CARRIAGE.

tal position, it is only necessary to loosen the connecting bolts of the two parts of the trunnion-ring. The upper part of the trunnion-ring is made in one piece with the trunnions, and remains in the bearings; the other part is

connected to the converter and is lowered with it on the car [Fig. 25]. It is very difficult to make a sufficiently strong and easily loosened connection of the two parts

FIG. 26.

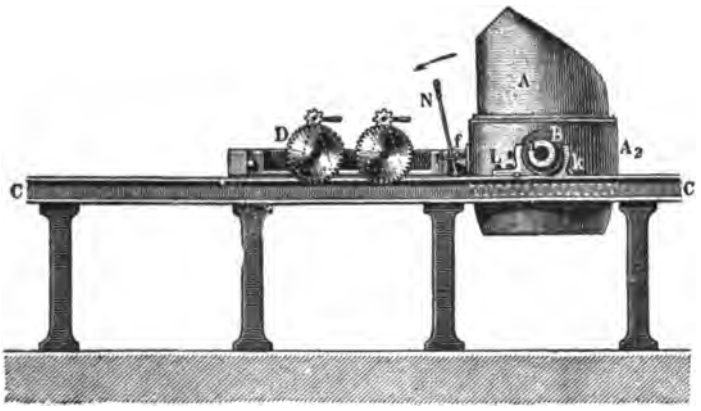

HENDERSON'S MOVABLE CONVERTER.

of the trunnion-ring, and this prevents the practical use of this arrangement. The North Eastern Steel Co., at Middlesbrough, are using a 60-ton hydraulic crane, as well as a steam traveller for changing their converters. James Henderson suggests a peculiar arrangement for changing the converter (R–P. 19635). Its adoption would necessitate an entire rearrangement of a basic steel works. The converter is supported on wheels, B, which are connected to trunnions, A, and run on a trestle, C C. The back part of the bearing is fixed and the front part, L, can be loosened [Fig. 26]. The converter can be run back after the loose part of the bearing is taken away. The carriage, D, carries the device to move the converter, and is fastened to the converter to prevent it from tilting. The connection of the trunnion with the hollow ring of the converter is shown in Fig. 27. Each trunnion has a square plate, J, which is riveted on to the ring. The air circulates around the hollow ring and cools it.

FIG. 27.

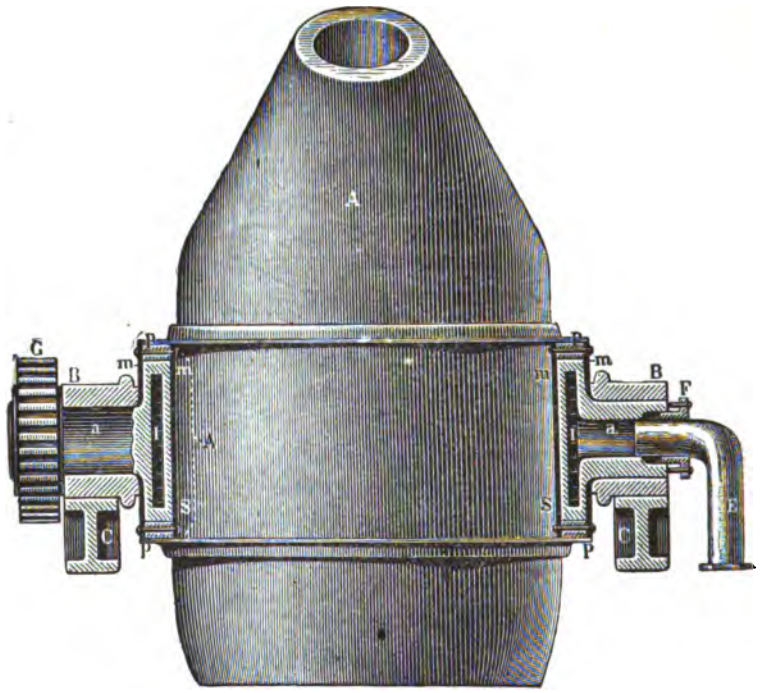

HENDERSON'S TRUNNION-RING.

CHANGEABLE PARTS OF THE CONVERTER.

Screw bolts and nuts are a drawback to the construction of the converter in separate parts. Keys are used very often to avoid this.

E. M. Daelen in Duisburg has one of the best constructions (R–P. 11361). The converter [Fig. 28] consists of the neck A, the middle part, B, the belly, divided in two pieces, C and D, and the bottom, E. Fig. 29 shows the connection of the neck with the middle piece; Fig. 30 shows the connection of the lower part with the middle and the trunnion-ring.[1] The tuyere plate in the wind box is separate and pressed to the bottom of the wind box with

(1) Compare the similar construction of Holley on p. 80.

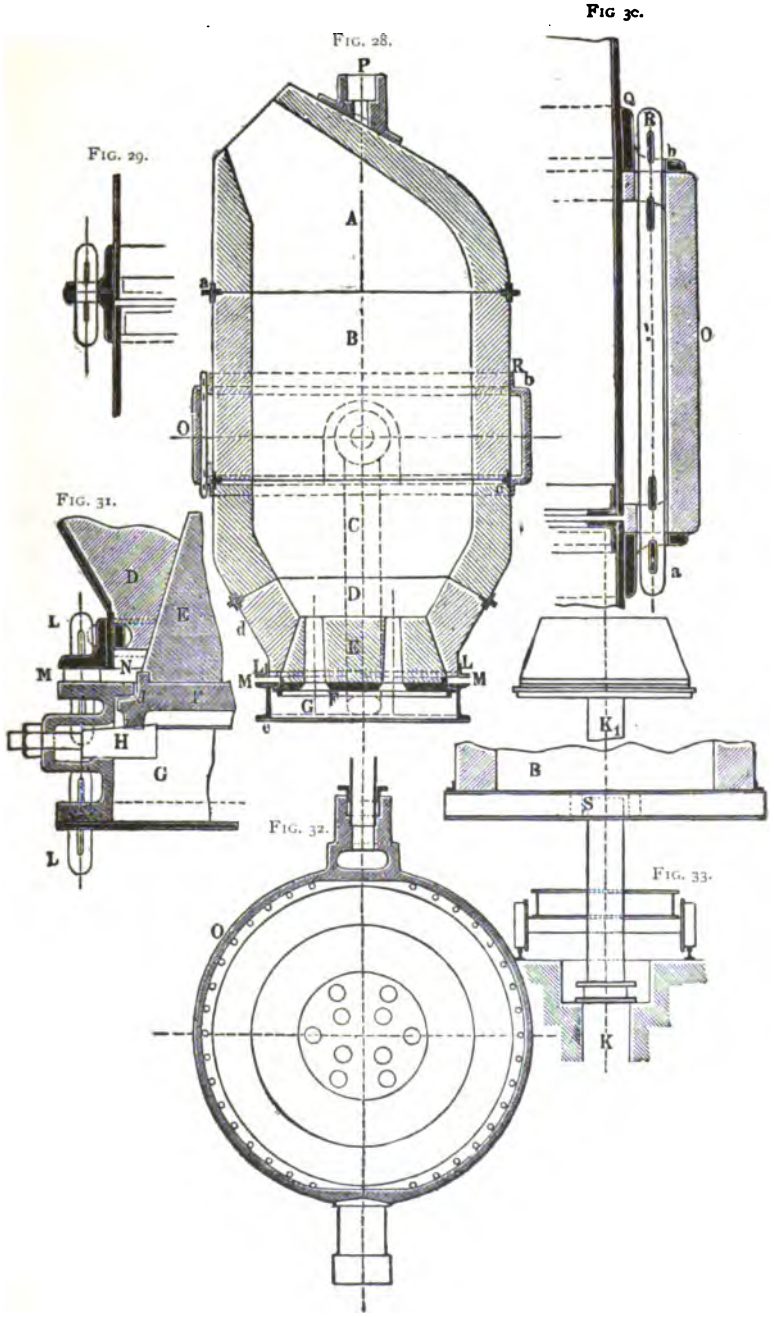

Daelen's Bessemer Converter.

6 wedges and is tightened against the wind box through the ring, I. It is also possible to change the plug bottom without taking off the wind box.

The wind box is connected to the converter by 10 bolts. These bolts have collars to allow a free space between bottom and converter shell. This space is used to tighten the space, N, and the joint between the bottom and the converter shell. To be able also to change the middle piece, B, of the converter with the hydraulic crane, the nose, F, has a socket, P, in which the plunger of the crane fits. The middle part can be changed by turning the converter down and loosening the bolts, *a*, Figs. 28 and 33. The ring, O, is fastened to the middle part, B, by an angle ring, Q. After loosening the keys, R, this part can be lowered on the crane which has on top two long beams, S.

Melaun tried to make it easier to separate the individual pieces of a converter by preventing their fluxing together. He coats each part with thin sheet iron and puts between these sheets a layer of very fine and pure iron-fluxing basic material.[1] It is hardly probable however, that this will prevent the iron from oxidation and therefore a formation of slag is more likely than if no coating had been used. He has also secured in Germany Patent No. 15716, for an arrangement for changing bottoms. The converter lining consists of two parts as shown in Fig. 34, the lining proper, *a*, and the lower part, *b*; these two parts are separated by the space, *c*. The lower part of the lining has a larger diameter than the converter proper, and the wind box has a still larger one. The bottom is perfectly cylindrical, and is joined flat on to the lining proper. For an easier changing of the bottom, it is coated with sheet-iron, which prevents a spread-

FIG. 34.

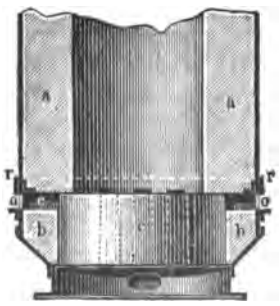

MELAUN'S BOTTOM.

(1) German patent, No. 12570.

ing of the upper part. The open space, *c*, is filled up with key-bricks after the bottom has been put on, and closed with the ring. The flat shape of the Holley bottom is the best for easy and quick changing, but it is also always necessary to loosen the bustle-pipe joint. The arrangement in Peine, Figs. 16 to 19 on Table I, Daelen's converter, and Melaun's bottom, do away with that, because the bottom is drawn out through the wind box. Nevertheless the Holley bottom is the most quickly changed.

COOLING OF THE CONVERTER.

Cooling of the converter shell would add a great deal to the durability and uniform wear and tear of the lining.

FIG. 35.

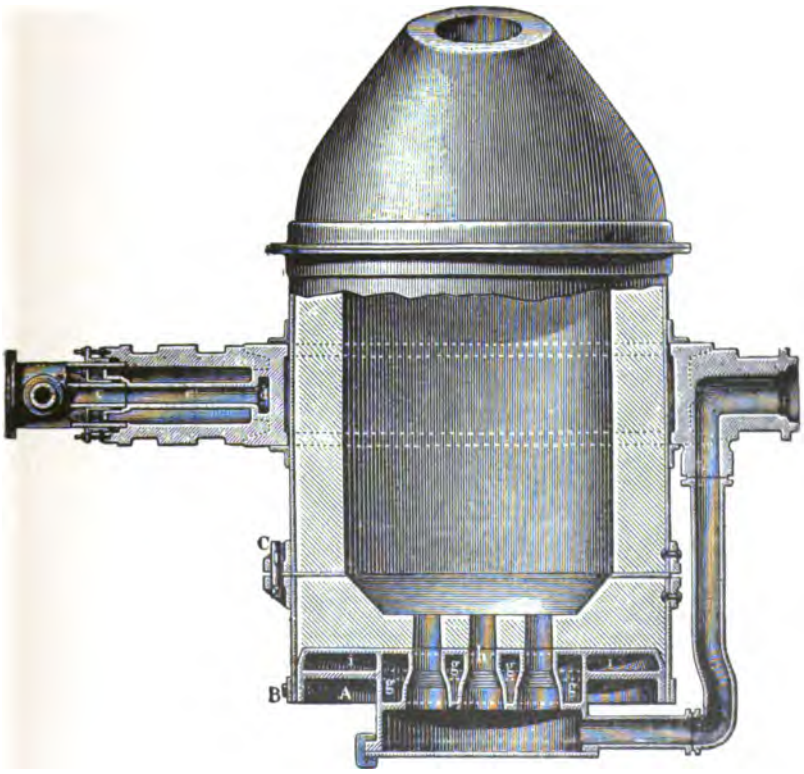

WATER-COOLING OF THE CONVERTER—VERTICAL SECTION.

The attempt has often been made to use the wind both for cooling and heating at the same time. This did not give any practical results, as the distance between trunnion and bottom over which the wind has to travel is too short to allow sufficient heating of the wind, and under any circumstances, the necessary adjuncts are too complicated for a Bessemer converter. It is best to use a water cooler, as the author proposed 25 years ago. The difficulty of its construction prevented its trial, and moreover the Bessemer-steel men were probably afraid of the danger of a possible explosion resulting from this arrangement. There exists but one German patent for the water cooling of the Bessemer converter. But it was never used, notwithstanding the

FIG. 36.

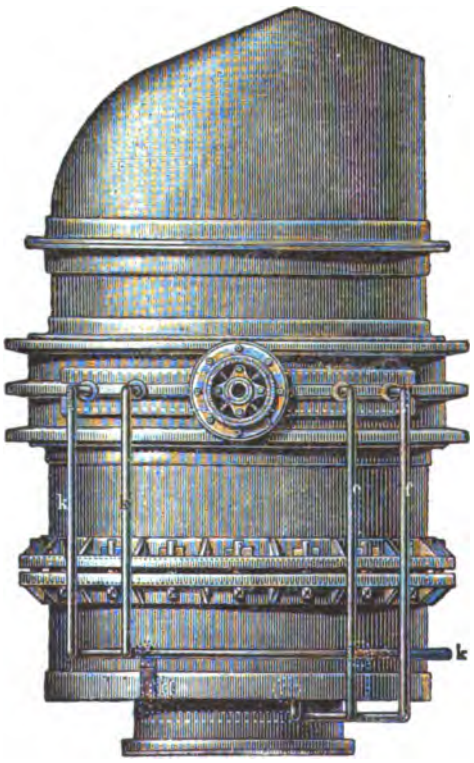

WATER-COOLING OF THE CONVERTER—VIEW.

arrangement for the inlet and outlet of water through the trunnions was entirely correct. Figs. 35 and 36 show the arrangement invented by Schmachtenberg at Hörde. The water comes from the main pipe through a regulating valve in the pipe, *c*, and through the pipe, c^1, which is connected and turns with the trunnion, in the hollow space of the trunnion shield. This space is connected by the pipes, *e* and *f*, with the tuyere box, *g*. The water circulates around the tuyeres and passes through the holes, *h*, in the space *i*. From there it flows through the pipes, *k*, back into the hollow trunnion shield, and through the trunnion into the waste pipe. One trunnion is used for the incoming cold water, and the other for the outflowing hot water. If the latter is used for the introduction of the wind, it is heated at the same time. The lining of the converter can also be cooled, if one or more chill plates are inserted in it. The chill plates can be connected with the tuyere box or get their water direct from the trunnion ring. The tuyere box, A, can be used with ordinary tuyeres, metal tuyeres, or without tuyeres. In this case it must be arranged as a pin bottom and be coated with a layer of refractory material. The easy changing of the bottom, as in the Holley or Peine construction, is lost in this arrangement. It would therefore be only an advantage if the bottom lasted as long as the lining and required no changing. No practical results have ever been heard of; nevertheless, the cooling of the bottom and the whole converter except the nose seems an arrangement worth considering. At present it is impossible to avoid a chemical attack on the lining through the basic slag, and it is therefore necessary to use more basic addition that would otherwise be necessary. It would be possible to work with a thin lining of basic slag, just sufficient, and not too strong, if an exactly regulated water cooler was used.

CHAPTER IV.

THE MATERIALS.

I. PIG IRON.

[The numbers in brackets refer to the Notes at the end of the volume.]

THE best pig iron for use in the basic process is undoubtedly made at Ilsede, Germany. It contains about 3% of phosphorus, over 2% of manganese, 0.5% of silicon, and less than 0.1% of sulphur. But many different grades of iron are used without making the process unprofitable.

Thomas thought at first that it would be better to use a pig iron with a medium amount of phosphorus. This idea is now entirely contradicted. Massenez, manager of Hörde, was the first to show that the amount of phosphorus could not be too high, as it is a most valuable fuel. He succeeded in working a specially high-phosphorus pig iron, ferrophosphor, with good results. The upper limit of the amount of phosphorus in the pig iron is therefore a question of economy. Only a part of the heat necessary to reduce the phosphoric acid in the blast furnace can be regained. It is therefore wrong to reduce phosphoric acid in the blast furnace more than is necessary, and when a sufficient amount of phosphorus is contained in the ore it is unnecessary to add more in the flux. The amount of phosphorus in the pig iron used to the best advantage never exceeds 3%. Most generally pig iron with 2% to 2.5% of phosphorus is used, and it is very difficult to get good results with 1.5% of phosphorus in the pig iron and none at all with 1.2% of phosphorus. The ferrophosphor made at Hörde contains 20% of phosphorus and the pig iron made at Witkowitz 7% of phosphorus.

It is clear that the SiO_2 formed by the oxidation of the silicon must be neutralized with lime or magnesia. The silicon, therefore, gives only a small amount of combustion heat. Pig iron with as small an amount of silicon as possible is best for use in the basic process; 0.5% is best and

1.5% is the highest allowable limit. Pig iron with 0.4% to 0.6% of silicon is very seldom made. To get the necessary heat at the beginning of the process it is necessary to substitute another element for the silicon, so valuable in the acid process. Manganese is found most valuable for this purpose. Generally it is impossible to make in the blast furnace pig iron with 2% of manganese without the addition of special ores. Ores high in manganese are generally low in phosphorus. It is best to get from 2.2% to 3% of manganese in the pig iron. Pig iron with less than 1% of manganese gives very unsatisfactory results. The pig iron used in the basic process is always white or silver gray, while that for the acid process is dark gray. That is the reason why the carbon, which exists mostly as combined carbon, seldom exceeds 3.5% and is generally 3%.

Sulphur is a very important factor in the pig iron, because it is very hard to eliminate. It ought never to be over 0.12%. Pig irons with 0.2% to 0.3% are seldom used. Generally the sulphur-content is 0.08%, sometimes 0.05% and even less. The sulphur-content can be increased without injury, the greater the amount of manganese. [9] It is usually calculated that 1% to 1.5% of manganese is necessary for 0.15% of sulphur.[1] The table on page 92 shows the analyses of pig iron used in the different basic steel works. These analyses are taken partly from printed sources and were partly made at the Royal School of Mines at Berlin.

The Use of Direct Metal from the Blast Furnace.

If it was possible to get pig iron always of the same and suitable quality, it should be brought from the blast furnace to the converter in a liquid state. For this purpose separate arrangements have to be made. The ladle which carries the liquid metal is mounted on a carriage which runs in a pit. The different pits are connected by a tunnel. If the ladle is lined out thick enough and the metal covered with a slag crust, it can be hauled for a considerable

(1) *Stahl und Eisen*, 1882, p. 165.

TABLE OF ANALYSES.

		Phosphorus %	Manganese %	Silicon %	Sulphur %
Peine	1	3.0	2.2	0.5	0.08
	2	1.5 to 3	2.0 to 2.5	0.5 to 0.7	0.08 to 0.45
Luxembourg—Lorraine	3	2.0	1.5	0.75	0.5
	4	1.5 to 2.5	1.0 to 1.5	0.1 to 0.8	0.13 to 0.6
	5	1.86	0.63	1.19	0.05
	6	1.75	0.61	1.32	0.08
Hörde	7	1.5 to 2.5	2.2 to 3.0	0.4	0.1
	8	2.18	1.03	1.22	0.08
	9	1.22	....	0.43	....
	10	1.28	0.52	0.66	0.29
	11	....	3.19	0.16	0.02
	12	2.6	2.37	0.3	0.05
	13	1.99	2.8	0.2	0.05
Ruhrort	14	2.09	....	1.34	....
	15	1.4	0.41	0.56	0.41
Rotheerde	16	1.75 to 2.0	1.5	0.8	....
Angleur	17	1.5 to 2.0	1.0 to 1.5	1.0 to 1.25	0.25
Ougrée	18	1.39	1.0	1.25	0.1
Creusot	19	2.5 to 3.0	1.5 to 2.0	1.3	0.2
Oberhausen	20	....	2.0	1.0	....
Neunkirchen	21	....	2.0	0.5	....
Witkowitz	22	2.47	1.18	0.42	0.13
	23	1.95	1.0	0.54	0.23
	24	3.46	1.16	0.11	0.09
	25	2.0	1.38	0.62	0.08
	26	0.9	....	0.79	....
Kladno	27	1.5	0.3 to 0.5	1.2 to 1.3	1.05
Middlesbrough	28	1.5	0.7	1.7	0.05
	29	1.75	0.6	1.3	0.15
	30	2.75	1.0	1.0	0.12
Different Brands	31	0.75 to 3.0	0.35 to 2.0	0.5 to 1.3	0.1 to 0.2

REMARKS.

1. Best quality. 2. Limits. 3. Medium quality. 4. Limits. 5. Blast furnace of Metz & Co. 6. Rodange. 10. Carbon, 2.83%. 16. Pig iron from Luxembourg. 17. Angleur, Belgium. 18. Ougrée, Belgium. 19. Creusot, France, 3% of Carbon. 21. Near Saarbrücken. 22. Witkowitz, Moravia, common quality. 26. This quality proved bad. 27. Kladno, Bohemia, 3½% of Carbon, a silver-gray pig iron, getting white if poured in chilled moulds. 28. Middlesbrough, England, 3½% of Carbon. 29. The same, 3¼% of Carbon. 30. The same, 3½% of Carbon. 31. Limits of qualities used, according to Thomas.

distance without losing its heat. This has been shown by the regular run with direct metal at Kladno. The ladle is lifted on an hydraulic hoist, or an incline, to a level of necessary height to pour the metal into the converter. In all cases it is better to weigh the ladle before and after the pour, as the inevitable formation of sculls hinders a correct measuring.[10]

The Remelting of Pig Iron.

The using of the liquid metal direct from the blast furnace is the most correct process, but all blast furnaces are not able to produce a uniform pig iron. This makes it necessary to mix different grades of iron. Some others have to transport the metal too far, or are unfavorably situated for transporting the iron. All these works, as well as those which have no blast furnaces, have to buy the necessary iron and are compelled to remelt it. The Peine cupola, which is shown on Fig. 37, is a very good construction. The amount of coke used is 15%, the same as in the acid Bessemer process.[11] It was proposed to commence the dephosphorization of the pig iron by lining the cupola with basic material. It is clear that with this arrangement a great amount of the necessary combustion heat of the phosphorus would be lost, and would have the same effect as a previous disiliconizing in the acid Bessemer process.

It is preferable to transport the molten metal in ladles, from the cupola to the converter. This saves the loss of heat which results from conveying it by runners. Neunkirchen has a movable hearth to each cupola, and at Friedenshütte the ladle is hoisted up to the converter platform by some arrangement similar to that used at the Bessemer works at Bethlehem, Pa.[1] The remelting of pig iron in a reverberatory furnace is only recommended when the price of coke is too high. At Teplitz all the pig iron is melted in a Siemens regenerative gas furnace. The coal used is a recent lignite and is very cheap. The regular charge is from 6 to 7 tons of pig iron. The furnace is

(1) *Abthl.* III., p. 904.

FIG. 37.

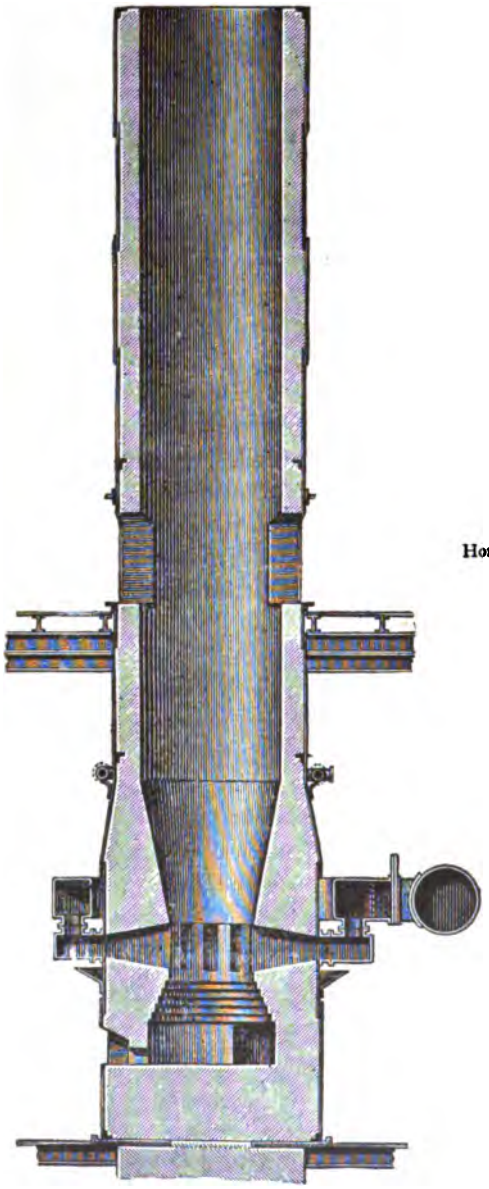

Horizontal Section near the Cooling Water Pipe.

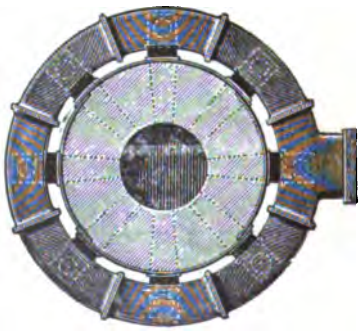

CUPOLA AT PEINE.

Vertical Section.

Horizontal Section near the Bustle Pipe.

Scale 1: 100.

12′–5″ long by 6′–6″ wide. The molten metal fills the furnace to its full width, but only to a length of 9′–10″. The greatest depth is in the middle and is 11″. The gas and air regenerators are upright and placed under the furnace. The gas chamber has a cubic capacity of 547 feet and the air chamber 512 feet. It takes about three hours to melt one heat. Therefore one furnace makes eight heats in 24 hours. The producers are of the Siemens type with inclined grates and natural draught. The coal used is chestnut size and lies on the grate about 20″ deep. The gases pass on the way to the furnace through a tar condenser. The pressure in the furnace being less than the atmosphere, the air is drawn into the furnace. 900 lbs. of coal is used to melt one ton of pig iron. The furnace is lined with silica bricks and lasts for about 600 heats, or three months.[1] Two furnaces are connected to one stack, which is 130 feet high and four feet ten inches in diameter. The chemical composition of the iron is somewhat changed in this furnace. The pig iron used in the acid process shows a reduction of silicon of from 2.5% to 2.25%. The iron used in the basic process changes considerably more. The manganese is reduced from 2% to 0.6.% These changes are considerably greater in the reverberatory furnace than in the cupola. For that reason the cupola is preferable to the reverberatory furnace in all cases, except under such conditions as at Teplitz. [12]

II. RECARBONIZERS.

a. Spiegeleisen and Ferromanganese.

The attempt to concentrate as far as possible (as in the acid process) the contents of manganese which must be added at the conclusion of the process for deoxydation, is in the basic process much more necessary, because the phosphorus is reduced out of the slag by means of the iron carbides and is carried into the metal. This compels the

(1) 3000 tons mild steel are produced per month at Teplitz.

use of as small a quantity as possible of recarbonizer. The spiegeleisen used seldom contains less than 12% of manganese. Witkowitz uses some with 13.8% of manganese. If the ferromanganese could be got homogeneous enough, it would be used to a greater extent, as it is possible to produce ferromanganese with 70% in the blast furnace. The method of melting the spiegeleisen in a cupola is the same as used in the acid process, but simply heated spiegeleisen is more frequently used in the basic process. Ferromanganese is never melted, and is sometimes used entirely cold. Hot spiegeleisen is sometimes put in the bottom of the ladle [Kladno] or else thrown in after about half the heat has been poured out [Teplitz]. Heated ferromanganese is always put in the converter after the finish of the afterblow and the skimming off of the slag. Creusot puts ⅓ of the spiegeleisen in the converter and ⅔ in the ladle. Molten spiegeleisen is always poured into the converter and sometimes after the slag has been poured off [Hörde], seldom without this operation (Oberhausen). If ferromanganese is used at the same time, it is put into the converter in preheated pieces, and the liquid spiegeleisen is poured in afterwards. The softer the steel is desired, the more necessary is the use of ferromanganese. Only for hard steel a low manganese spiegeleisen can be used. The amount of spiegel or ferro depends on the pig iron used, on the run of heat, and on the quality of the steel to be made. Some examples are given below:

	%		%	
Hörde, for soft steel,	1¼	Spiegel,	3¾	Ferro.
" " hard "	7	"	2	"
" average,	9	" with 16 to 17		Mn.
Rhine Steel Works,	5		0.8	Ferro.
or	4¾	"	1¼	"

Kladno 8 to 9% of the iron weight, that is 8% ferro or more seldom 9% spiegel. [18]

---

[1] *Schmiedbares Eisen*, p. 505, *et seq.*

The preheated spiegel has the advantage over the cold spiegel, in not cooling off the metal so much, and over the molten spiegel in not giving such a violent reaction.

Ordinarily small reverberatory furnaces are used for heating the spiegel, which are heated by the gases of the dolomite kilns. In Teplitz the furnace for heating the spiegel and lime are combined, and only one grade is used for both. The furnace has an inclined grate, charged with small pieces of brown-coal. Between the furnace and the stack is the tower containing the lime. Teplitz uses 44 lbs. of lignite for the heating of the lime and ferro necessary for one heat. The use of heated ferro and spiegel is highly recommended, because in the molten spiegel a large amount of manganese is lost by oxidation, not only in the furnace, but to a great extent after the tap, if the ferro is much exposed to the air while running through the trough.

b. Ferrosilicon and Manganese Silicon.

Ferro and spiegel nearly always produce a very turbulent reaction. The deoxidation process produced by the manganese is always accompanied by a great generation of CO. The more carbon contained in the recarbonizer the greater the reaction. To avoid the heavy reaction, ferrosilicon is used. In consequence of the great demand, Königshütte uses one of their blast furnaces for the exclusive manufacture of ferrosilicon. On the other hand, some think that the heavy reaction is favorable. It mixes the metal thoroughly with the manganese. The ferrosilicon gives a quiet metal, and it is used extensively for steel castings. Ferrosilicon and manganese silicon are used but little outside of France, where they are preferred to spiegel and ferro for the above reasons.

The following table shows the composition of some brands.[1]

---

(1) *Oesterr. Zeitschr. f. Berg- und Hüttenwesen*, 1883, p. 341.

	Manganese. %	Silicon. %	Carbon. %	
1	30.14	9.76	1.74	Varieties from Hollway, free from graphite.
2	28.89	8.81	2.13	
3	25.70	6.72	3.01	
4	27.13	4.58	3.65	
5	44.64	3.30	4.68	High manganese and low silicon.
6	48.20	3.35	4.55	
7	68.64	0.43	5.79	
8	70.10	0.12	5.59	
9	79.36	0.87	5.69	
10	24.36	9.19	2.72	With segregations of graphite.
11	2.11	8.33	2.42	Ferrosilicon.

c. Scrap.

As much scrap as possible is charged without lowering the heat of the bath too much. The amount of scrap allowable is only gained by experience. Teplitz reaches a very high percentage. For a heat of 6.5 tons, 800 to 1,600 lbs. of scrap is used. The scrap is put in during the whole time of the blow, and a little more during the after-blow.[1] In some works the converter has to be turned down horizontally to charge the scrap, but at Teplitz the workmen throw it in by hand without interrupting the blow. [14]

III. Lime.

Lime is used to neutralize the silica, which comes, when a lining free from silica is used, from the oxidation of the silicon in the pig iron.

Limestone is burnt to lime to prevent too great a cooling off in the bath, which would be the result if limestone was used and the heat of the bath required to drive off the carbonic acid.

The Burning and Preheating.

Limestone is mostly burnt in ordinary shaft furnaces, and charged with layers of coke or coal. It is better to use a

(1) Iron and Steel, 1882, II., p. 459.

FIG. 38.

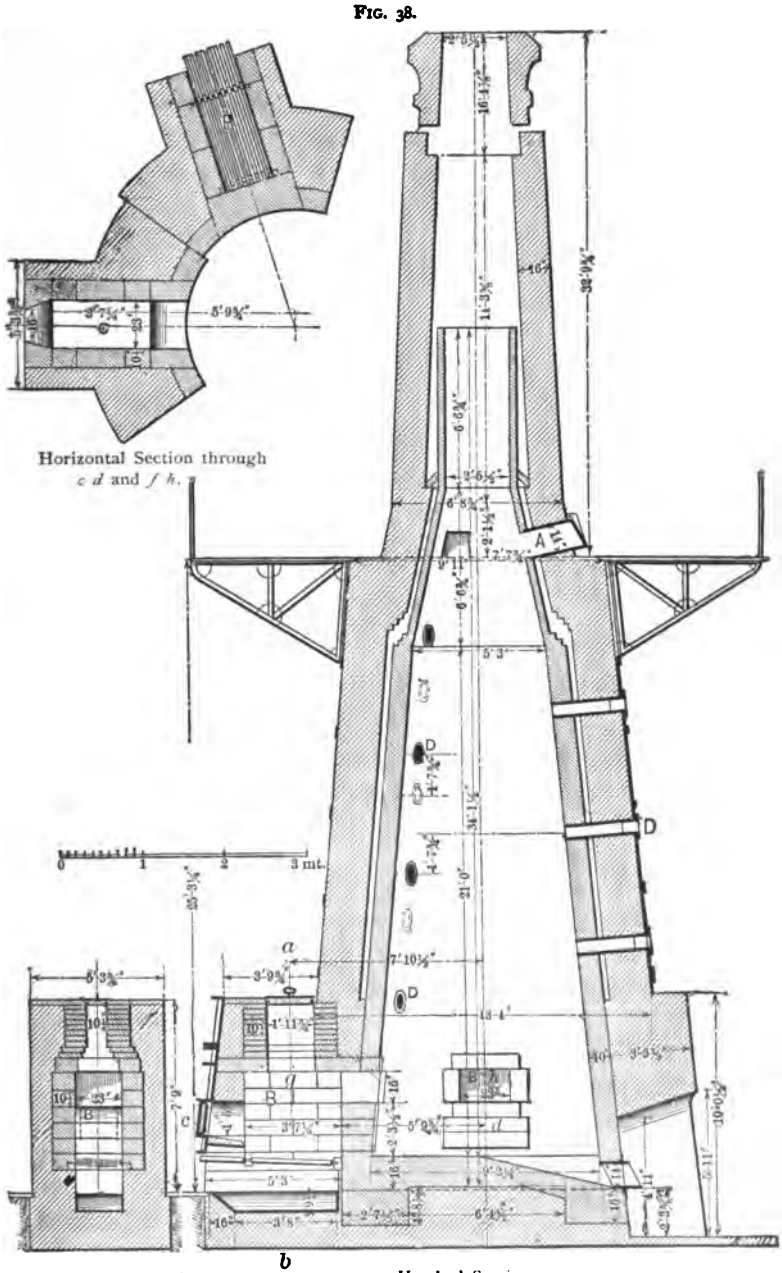

LIME KILN AT PEINE.

separate grate fire or a perfect gas heating which avoids the mixing of the lime with the siliceous ashes. Fig. 38 shows a lime kiln with separate fires used at Peine.[1] [16].

In Teplitz the heating of the lime is combined with that of the ferromanganese.[2] The lime is heated by the waste heat of the ferro furnace, in which the recarbonizing material, as described, is heated only, not melted. [14] The furnace has an inclined grate on which chestnut lignite is burnt.[3] It is constructed as a horizontal reverberatory furnace, and has at its end a vertical tower. The tower inside has two inclined planes changing the direction of the down-sliding lime. The gases are carried away through a stack, which has at its lower end a charging door for the lime. Burnt lime is charged, and it slides slowly down in proportion to the quantity drawn out at the lower end. To get the necessary draught, only a little small lime has to be charged. For a 6.5 ton heat 814 lbs. of spiegel and 1,870 lbs. of lime are used. It takes 44 lbs. of lignite to heat this quantity.[4] The lime is never dead burnt, because it would cause it to lose its porosity, and have a slower effect in the converter. The amount of lime used to the quantity of metal charged varies from 10% to 18%. Hayingen uses 10% to 15%; Teplitz, 13%; Middlesbrough, 15% to 17%; Creusot, 16% to 18%; and Kladno and the Rhine Steel Works, 12%.

Introduction of the Lime.

The lime is generally put into the converter through shutes from the charging platform of the cupolas; they are in such a position that the nose of the converter is placed in position by a slight turn out of the vertical line. In other cases, as at Hayingen, the converter stack has a side opening in which there is a projecting runner, and the lime is introduced into the converter while it is in a perfectly vertical

(1) With permission of the author, from Ledebur's *Eisenhüttenkunde*, I., p. 212.

(2) Compare p. 97.

(3) The size of chestnut coal varies between 0.05 and 2 cubic inches.

(4) Iron and Steel, 1882, II., p. 455.

position. At Kladno the lime is put in large iron boxes, which are fastened to the converter nose and empty themselves when the converter is turned up. At Friedenshütte the lime is put into the converter when it is in a horizontal position. The lime is loaded in buggies which run on a track in front of the vessel. The lime is very seldom heated in the converter, but sometimes the further heating of the lime and the converter are combined in one operation. At Teplitz 15 to 20 lbs. of coke and 300 lbs. of lignite are put into the converter after the bottom has been repaired and is sufficiently heated by a slow blast of about five minutes; the coal and ashes are then dumped out, and the hot lime charged without any further fuel. Immediately afterwards the molten iron is poured in. At Kladno 2200 lbs. of lime mixed with 320 to 360 lbs. of coal, is charged for a six-ton heat, and heated under a slow blast until the metal is ready to be poured into the converter. In almost all the other works the proceedings are the same, only coke is mostly used instead of coal. At Hayingen and the Rhine Steel Works the converter, still hot from the last heat, is charged with lime at once, and then the pig iron charged without use of any special fuel.

Amount of Lime Used.

One cubic yard of burnt lime weighs about 1,261 lbs. 18% of lime addition for six tons of pig iron weighs 2,376 lbs. This quantity takes considerably more room in the basic converter than in the acid converter. Besides this, the actual amount of lime used is considerably greater than it should be according to theory. This will be shown later; it arises from the great waste of the fine stuff which is blown out, and partly from a necessity of having a safe excess in the slag. A theoretical estimate of the amount of lime addition was proposed by Professor Ehrenwerth, who has become very prominent in the whole theory of the basic process.[1]

---

(1) *Studien über den Thomas-Gilchrist Process*, Vienna, 1881.

If the burnt lime contains $n\%$ of silica, this amount of silica requires:—

1]. $\frac{n}{100}$ 1.867 parts by weight of CaO for the generation of $Ca_2\ SiO_4$; and

2]. $2\ \frac{n}{100}$ 1.867 parts by weight of CaO for the generation of $Ca_4\ SiO_6$.

Therefore the free lime present is only

1*a*] $1 - \frac{n}{100} - n.\ 0.01867$ parts by weight;

2*a*] $1 - \frac{n}{100} - n.\ 0.03734$ parts by weight;

and one part of free lime is contained in:

1*b*] $\frac{1}{1 - \frac{n}{100} - n.0.01867}$

2*b*] $\frac{1}{1 - \frac{n}{100} - n.0.03734}$ parts of burnt lime.

Assuming that the lime contains 5% of silica, the following figures show the results:

1) = 0.09335 parts by weight,
2) = 0.18670 parts by weight,
1*a*) = 0.857 parts by weight,
2*a*) = 0.763 parts by weight,
1*b*) = 1.17 parts by weight,
2*b*) = 1.31 parts by weight.

One part by weight of silicon requires for the formation of $Ca_2\ SiO_4$, 4 parts by weight of CaO, i. e., $\frac{4}{1 - \frac{5}{100} - 5 \times 0.01867}$, = 4.68 parts of burnt lime; and for the formation of $Ca_4\ SiO_6$, $\frac{8}{1 - \frac{5}{100} - 5 \times 0.03734} = 10.48$ parts.

One part of phosphorus requires for the formation of $Ca_2\ P_2\ O_7$ 1.803 parts of free lime; or, of lime with $n\%$ of silica, used for the formation of $Ca_2\ SiO_4$, it requires $\frac{1.803}{1 - \frac{n}{100} - n.\ 0.01867}$ parts, or with 5% of silica, $\frac{1.803}{1 - \frac{5}{100} - 5 \times 0.01867}$, = 2.110 parts. Of lime with 5% of silica, used for the forma-

tion of $Ca_4 SiO_6$, it requires $\frac{1.803}{1 - \frac{5}{100} - 5 \times 0.03734} = 2.362$ parts; and, finally, for the formation of $Ca_3 P_2 O_8$, it requires $1.5 \times 2.362, = 3.543$ parts. [17]

Assuming that the manganese goes into the slag as a unisilicate, and knowing that one part of manganese takes $\frac{14}{55} = 0.2545$, parts of silicon, then, if s stands for silicon, and m for manganese in the pig iron, the silicon available for the formation of calcium silicate is $s - 0.2545\ m$, or, under the supposition of a subsilicate, $s - 0.1257\ m$.

Therefore the rest of the silicon requires for the formation of $Ca_2 SiO_4$, $4.68\ (s - 0.255\ m)$ of a burnt lime containing 5% of silica; and for the formation of $Ca_4 SiO_6$, $10.48\ (s - 0.127\ m)$.

If p signifies the amount of phosphorus in the pig iron, the amount of lime containing 5% of silica would be:

1) For the formation of:—

$Ca_2 SiO_4$ and $Ca_2 P_2 O_7 = 4.68\ s - 1.19\ m + 2.110\ p$;

2) For the formation of:—

$(Ca, Mn)_4 SiO_6$ and $Ca_2 P_2 O_7 = 10.48\ s - 1.336\ m + 2.362\ p$;

3) For the formation of:—

$Ca_4 SiO_6 + Ca_3 P_2 O_8 = 10.48\ s - 1.336\ m + 3.543\ p$. [18].

Materials used as Substitutes for Lime.

Thomas at first thought of using dolomite instead of lime. It was soon shown that lime, when porous after burning, gave better results, especially when a stone sufficiently low in silica was used. Thomas also proposed the use of iron oxide with the lime, but this was abandoned.[1] It is now known that the generation of slag from iron oxide was unsuccessful as long as an acid lining was used. The use of iron oxide to form a basic slag was proposed by the author in the early days of the Bessemer process.[2]

It is also to be denied that the generation of a slag con-

(1) Compare page 25.

(2) Compare page 7. The author proposed at that time to substitute the phosphoric slag which was poured off by a pure refinery cinder.

taining iron is an advantage to the basic process. As long as iron containing carbon exists, the iron oxide will be reduced and replaced by the lime of the lining, whereas, in fact, the amount of wear of the lining ought to be reduced by means of the basic addition.

It is further a question whether an addition of oxide of manganese would not be suitable, as in the Krupp process.[1] This also has to be contradicted. If the amount of lime addition was reduced or entirely done away with, and oxide of manganese used instead, this would combine with the generated silica. But some lime would still be necessary for the formation of the lime phosphate, and the heat gained by the oxidation of the manganese would be lost. Afterwards experiments were tried to make the slag, which was very stiff through the great amount of lime used, more liquid. For this purpose, fluorspar and alkalies were proposed. The latter were in the form of haloid salts or carbonates. The liquefying of the slag did not prove a success. On the contrary, it was found necessary to add more lime to further thicken the slag, as at Oberhausen, where they wanted to avoid the pouring of the slag. Only in Creusot 1.5% of fluorspar and 16% to 18% of lime was regularly used.

Wherever the attempt was made to avoid the after-blow by the formation of a separate slag, it was without success. The materials used for this purpose were oxides of iron and manganese, cryolite, fluorspar, caustic alkalies and alkaline carbonates, Stassfurt salts and other haloid salts, alkaline carbonates alone or mixed with lime, magnesia, baryta, or strontia (Hörde, German Patents, No. 10472, 13660, 14468, 14578).

Many who have tried these or similar materials have shown that it is impossible to avoid the after-blow. A very thin slag facilitates the mixing of the carbon-iron with the slag, and this always reduces the phosphorus during the blow. It is useless to pour off the slag before the after-blow, as it is necessary for the taking up of the phosphoric acid. There remains only the process as actually introduced, by

(1) Compare page 8.

which the lime slag is used for, and poured off after, complete dephosphorization, but before the addition of the recarbonizer (spiegel, ferro, or ferrosilicon). [19]

IV. THE BLAST.

To complete the chemical reaction in the basic process a higher blast pressure is required than in the acid process. The blowing engines formerly used in the old Bessemer works, never gave a higher pressure than 22½ lbs. The new ones are arranged for 30, and have proved a great success. The new blowing engine at Heft is calculated for a pressure of 30 to 37½, and can be worked as high as 52.[1] This is, indeed, a great progress. Daelen, in a pamphlet for which he obtained a prize medal from the *Verein zur Beförderung des Gewerbfleisses* (Trade Promotion Association), gives a general description of the Bessemer blowing engines.[2] The amount of blast cannot be judged from the number and sizes of the holes in the tuyeres, as they wear out quickly. Some examples are given of the sizes used:

Name of Works.	Tuyeres.	No. of holes in each Tuyere.	Total No. of holes.	Diameter of holes in inches.
Teplitz.....	6	7	42	$\frac{3}{4}$
Witkowitz.....	4	7	28	$\frac{15}{16}$
Kladno.....	..	..	84	$\frac{3}{8}$
Rotheerde.....	..	..	64	$\frac{13}{14}$
Peine.....	..	..	56	$\frac{7}{16}$
Hörde.....	..	..	36	$\frac{17}{18}$
Neunkirchen.....	8	7	56	$\frac{7}{16}$
Hayinge.....	13	8	104	$\frac{3}{8}$

(1) Compare A. Riedler, *Das Bessemergebläse in Heft* (*Zeitschr. deutscher Ingenieure*, Nos. 1 and 2, 1884).

(2) *Verhandlungen des Vereins z. Bef. d. Gewerbfleisses*, 1883, p. 181.

It is impossible to calculate the volume of air blown into the converter, from the pressure alone, as the diameters of the tuyere holes change frequently and occasionally some are clogged up. Therefore, only the number of revolutions of the blowing engine during the after-blow is to be referred to. At Teplitz, the blowing engine cylinder is 33½″ × 50′ and has a capacity of 25.43 cubic feet; generally 350 revolutions were required to finish the blow after the carbon elimination, for a pig iron containing 2% of phosphorus and 0.6% to 0.7% of manganese, with tuyeres that had been already used. If the tuyeres are new, or very long, 370 revolutions are required, and for a pig iron high in phosphorus, 400 revolutions are necessary under the same circumstances. It is calculated that 6000 cubic feet of air is necessary for a gross ton of pig iron. At Kladno the after-blow takes 5 minutes and some seconds, and the blowing engine makes 320 revolutions at 30 lbs. wind pressure.

Hauer computed a table for the amount of air to be blown in the converter at the beginning of the blast.[1] This represents the minimum, because with the burning down of the tuyeres the pressure is maintained or even sometimes raised. In this table the amount of air in cubic metres is calculated from the diameter of the tuyere holes, d, the pressure in the blast pipe, h_1 (in metres of the mercury column or kilogrammes per square centimetre), and the opposite pressure in the converter, h_2.

The opposite pressure is not quite determined by the thickness of the iron baths and the pressure of the gases resting above it. The oxidation results from a combining of the oxygen of the air; this gives the remaining nitrogen, at least for a moment, a slight tension, which prevents the full force of the pressure. It is sufficiently correct for a rough estimate to deduce h_2 in reference to the thickness of the metal bath alone.[2]

If the amount of wind is reduced to 32° Fahrenheit and 30″ barometer, or to the temperature and pressure of the

(1) V. Hauer, *Hüttenwesensmachinen, 2d Aufl.*, p. 17, p. 613.

(2) The height of the metal bath is generally 16″ to 20″, but varies with the quantity of the iron and the diameter of the converter.

WIND TABLE FOR BESSEMER BLOWING ENGINES.

d in Millimetres.		10.0	10.5	11.0	11.5	12.0	12.5	13.0	13.5	14.0	14.5	15.0	15.5	16.0	16.5	17.0	17.5	18.0	18.5	19.0	19.5	20.0
Pressure $h_1 - h_2$ in		AMOUNT OF BLAST IN CUBIC METRES.																				
Metres.	Kilog. per square cm.																					
0.50	0.68	1.20	1.33	1.45	1.59	1.73	1.88	2.03	2.20	2.36	2.53	2.71	2.90	3.09	3.28	3.48	3.69	3.91	4.13	4.35	4.58	4.82
0.55	0.74	1.26	1.39	1.52	1.67	1.82	1.97	2.13	2.30	2.48	2.66	2.84	3.04	3.24	3.44	3.65	3.87	4.10	4.33	4.56	4.81	5.06
0.60	0.81	1.32	1.45	1.59	1.75	1.90	2.06	2.23	2.40	2.59	2.78	2.97	3.17	3.38	3.60	3.82	4.04	4.28	4.52	4.77	5.02	5.28
0.65	0.88	1.37	1.51	1.66	1.82	1.98	2.14	2.32	2.50	2.69	2.89	3.09	3.30	3.52	3.74	3.97	4.21	4.45	4.70	4.96	5.23	5.50
0.70	0.94	1.42	1.57	1.72	1.88	2.05	2.23	2.41	2.60	2.80	3.00	3.21	3.43	3.65	3.88	4.12	4.37	4.62	4.88	5.15	5.42	5.71
0.75	1.02	1.47	1.62	1.78	1.95	2.12	2.30	2.49	2.69	2.89	3.10	3.32	3.55	3.78	4.02	4.27	4.52	4.78	5.05	5.33	5.61	5.91
0.80	1.08	1.52	1.68	1.84	2.01	2.19	2.38	2.57	2.78	2.99	3.21	3.43	3.66	3.90	4.15	4.41	4.67	4.94	5.22	5.50	5.80	6.10
0.85	1.15	1.57	1.73	1.90	2.08	2.26	2.45	2.65	2.86	3.08	3.30	3.54	3.78	4.02	4.28	4.54	4.81	5.09	5.38	5.67	5.97	6.29
0.90	1.22	1.61	1.78	1.95	2.14	2.33	2.52	2.73	2.95	3.17	3.40	3.64	3.89	4.14	4.40	4.67	4.95	5.24	5.53	5.84	6.15	6.47
0.95	1.29	1.66	1.83	2.00	2.20	2.39	2.59	2.80	3.03	3.26	3.49	3.74	3.99	4.25	4.52	4.80	5.09	5.38	5.69	6.00	6.32	6.65
1.0	1.35	1.70	1.87	2.06	2.25	2.45	2.66	2.88	3.11	3.34	3.58	3.83	4.09	4.36	4.64	4.93	5.22	5.52	5.83	6.15	6.48	6.82
1.1	1.49	1.78	1.96	2.16	2.36	2.57	2.79	3.02	3.26	3.50	3.76	4.02	4.29	4.58	4.87	5.17	5.47	5.79	6.12	6.45	6.80	7.15
1.2	1.62	1.86	2.05	2.25	2.47	2.69	2.91	3.15	3.40	3.66	3.93	4.20	4.49	4.78	5.08	5.40	5.72	6.05	6.39	6.74	7.10	7.47
1.3	1.76	1.94	2.14	2.34	2.57	2.80	3.03	3.28	3.54	3.72	4.09	4.37	4.67	4.97	5.29	5.62	5.95	6.30	6.65	7.02	7.39	7.77
1.4	1.89	2.01	2.22	2.43	2.66	2.90	3.15	3.40	3.68	3.86	4.24	4.54	4.84	5.16	5.49	5.83	6.18	6.53	6.90	7.28	7.67	8.07
1.5	2.03	2.08	2.29	2.52	2.76	3.00	3.26	3.52	3.80	4.09	4.39	4.70	5.01	5.34	5.68	6.03	6.39	6.76	7.15	7.54	7.94	8.35
1.6	2.17	2.15	2.37	2.60	2.85	3.10	3.36	3.64	3.93	4.23	4.53	4.85	5.18	5.52	5.87	6.23	6.60	6.99	7.38	7.78	8.20	8.62
1.7	2.29	2.22	2.44	2.68	2.94	3.20	3.47	3.75	4.05	4.36	4.67	5.00	5.34	5.69	6.05	6.42	6.81	7.20	7.61	8.02	8.45	8.89
1.8	2.44	2.28	2.51	2.76	3.02	3.29	3.57	3.86	4.17	4.48	4.81	5.14	5.49	5.85	6.22	6.61	7.00	7.41	7.83	8.26	8.70	9.15
1.9	2.57	2.34	2.58	2.83	3.10	3.38	3.67	3.97	4.28	4.60	4.94	5.29	5.64	6.01	6.40	6.79	7.19	7.61	8.04	8.48	8.93	9.40

NOTE.—1 cubic metre = 35·32 cub. feet. 1 Kilogram per square centimetre = 14·223 lbs. per square inch. 1 millimetre = 0·0394 inches. 1 metre = 39·37 inches.

suction chamber of the blowing engine, the sum found in the table has to be multiplied by some factor of correction according to the formulas:

M_0 Amount of blast at 32° F. and 30″ $= f \lambda M$.

M_s Amount referred to the suction chamber $= f_1 M_0$.

Hauer's values of f, f_1, and λ are given in a table in the second volume of Wedding's Metallurgy (chap. II., pages 171 to 175).

Daelen gives a review of existing blowing engines, showing a great number previously used in the acid Bessemer process which are now used for the basic process (page 109).

The following dimensions of other blowing engines are from notes made by Schlinck:—[1]

	Steam Cylinder. Diam. in inches.	Air Cylinder. Diam. in inches.	Stroke. Inches.
Barrow (England),	40	54	60
Edgar Thompson,	42	54	48
Bethlehem,	36	48	60
Anzin (France),	47½	59⅛	70⅞

The air cylinders of the blowing engines for the basic process are:—

	Inches.		Inches.	
At Teplitz,	34¼	diam.	50	stroke.
At Kladno,	36⅝	diam.	61⅛	stroke. [20]

Blowing engines to supply blast for only one converter at a time, ought generally to take from 530 to 700 cubic feet of air, and compress it to from 30 to 45 lbs. pressure. In the basic works it is calculated that 16,000 to 17,000 cubic feet of air, including a loss of from 30% to 40%, is required for each ton of iron in the converter.

Heft uses a blowing engine with 42 inch cylinder and 59 inch stroke (Riedler [2]).

Daelen in a paper read before the Association for the Promotion of Trade for which he received a prize, comes to

(1) Glaser's *Annalen für Gewerbe und Bauwesen*, 1880, II., p. 233.

(2) *Zeitschr. des Vereins deutscher Ingenieure*, 1884.

	Name of Steel Plant.	Erected in.	Capacity of the converter in tons.	Diameter of Steam Cylinder in inches.	Diameter of Blast Cylinder in inches.	Stroke. Inches.	Revolutions per minute.	Steam pressure.	Blast pressure. Pounds.	Amount of air sucked up per cylindrical revolution. Cubic Feet.	Proportion of section between steam and air cylinder.	
1	Hörde	1865	3	37	43 5/16	49 1/2	28 to 32	76	22 to 26 1/2	76.3	1 : 1·77	Horizontal.
2	Hösch near Dortmund	1872	6	43 5/16	49 1/4	61 13/16	28	76	22 to 29 1/2	135.63	1 : 1·3	Horizontal.
3	Rotheerde	1875	5	39 1/8	49 1/4	63	22	76	22 to 29 1/2	106.	1 : 1·5	Horizontal.
4	Königshütte	1875	10	52 1/2	61 13/16	61 13/16	25 to 30	66	22 to 29 1/2	214.75	1 : 1·44	Horizontal.
5	Phœnix	1873	5	33 7/8	43 5/16	49 1/2	50	76	22 to 29 1/2	76.30	1 : 1·63	Horizontal.
6	Prevali	1875	10	51 1/8	62 5/16	62 5/16	20	60	22 to 29 1/2	219.	1 : 1·45	Horizontal.
7	Gutehoffnung	1872	8	49 1/4	59 1/16	55 7/8	38	66	22 to 29 1/2	176.60	1 : 1·44	Vertical.
8	Bochum	1870	10	49 1/4	61 13/16	68 1/8	25 to 30	60	22 to 29 1/2	240.88	1 : 1·58	Vertical.
9	Henrichshütte	1871	8	43 5/16	55 1/8	62 5/16	35	74	22 to 29 1/2	171.65	1 : 1·6	Vertical.
10	Union near Dortmund	1872	8	37 1/8	49 5/16	49 5/16	40	74	22 to 29 1/2	109.5	1 : 1·59	Vertical.
11	Bessèges	1878	6	25 1/4 / 44 7/8	42 1/2	73 1/4 / 98 7/16	18 to 20	70	22	169.54	1 : 1·62	Vertical.
12	Angleur	?	3	29 11/16	40 11/16	35 7/16	40	?	?	54.75	1 : 2·0	Vertical.
13	Hörde, (new blowing engine)			52 1/8	65	69 1/4	28 to 35	?	21 to 35			

the following conclusions in respect to the selection of a vertical or a horizontal engine:[1]

The advantage of the vertical blowing engine over horizontal engines lies in the more uniform wear of all the moving parts. The blowing pistons are very heavy, and the black-lead used as a lubricant is not so good as the wet steam in the steam piston. The arrangement of the valves in a vertical engine is a great deal more simple. They can be put on the outside cylinder-heads in such a way that it is only necessary to loosen one screw to take them off. The valves can be put in with a vertical motion, an advantage that cannot be equalized by the use of springs in the horizontal engines.

The advantages of the horizontal engines are: The easier erection and the more convenient arrangement for examining and keeping all the parts in good order.

The rubber ring valves used almost without exception in the older Bessemer blowing engines are now abandoned, not only for the inlet valves but also for the outlet valves. Clack and disk valves with springs are now more generally used.

A large number of suction valves are used so that each will only have a small area, and have a free passage way of $\frac{1}{8}$ to $\frac{1}{7}$; and the pressure valves have from $\frac{1}{16}$ to $\frac{1}{15}$ the area of the piston. The number of suction valves varies from 18 to 32, and the pressure valves from 4 to 8. Daelen came to the conclusion[2] that the best arrangement of construction for running is a positive light metal disk or clack valves with a leather ring. [21] The clack valves allow the full use of the free part of the cylinder heads, and the advantage of the disk valves is a changeable seat. The rubber valves do not answer the purpose, and the best valves are a light steel disk with a leather ring.

Daelen recommends positive gear for the suction valves alone, because the pressure valves can only work equally

(1) *Verhandlungen des Vereins zur Beförderung des Gewerbfleisses*, 1883, p. 181.

(2) *Verhandlungen des Vereins zur Beförderung des Gewerbfleisses*, 1883, p. 186.

well, with the same gear if the pressure is always the same.[1]

Prevali uses a blowing engine on the above principle.

In spite of this, Riedler has successfully used in Heft valves with positive closing movement and a free opening.[2]

Heating the Blast.

It was first proposed to shorten the basic process by heating the blast, in the same way as in the acid process, and for this purpose hot-blast stoves were erected between the blowing engines and the converters.

The result was entirely the opposite of what was expected. Better results were obtained through a cooling of the air, as introduced at first by Göransson.

When the hot blast is used, the oxygen of the air is not dense enough in the metal, and the action of oxidation is greatly reduced. Göransson[3] puts up an apparatus for the compression of the air, in which the air is passed through many narrow pipes cooled from the outside by running water.

It should here be remarked in relation to the heating of the blast, that it has been proposed to use the converter flames for the heating of the cupola blast,[4] but it would be better to use it for the heating of the spiegel.

Drying the Blast.

The effect produced by cooling the air does not depend at all on the extraction of the moisture from it. An attempt was made to dry the air by using hygroscopic materials, but the prospects are slight for any economical result with an artificial drying. The difficulty of keeping the vessels in use tight, and the great quantities of materials needed, such as burnt lime, caustic soda, sulphuric acid, etc., etc., make the cost of running more expensive and complicate the process.

---

(1) *L. c.*, p. 179; and Schlinck, *Gebläsemaschinen*, *Glaser's Annalen*, 1882, II., pp. 8 and 93.

(2) *Zeitschr. des Vereins deutscher Ingenieure.*

(3) German Patent, No. 22172.

(4) Engineer, 1879, vol. XLVIII., p. 321.

The moisture in the air is very disadvantageous, because, first, the heat necessary for the decomposition of the water is unnecessarily employed, and free hydrogen is formed which is absorbed freely by the metal and remains there. But it is still a question whether more hydrogen is not absorbed during the pouring of the steel than during the blow, and it therefore needs a still more accurate examination before a decisive judgment on the economical profit of a dry blast can be formed.

Influence of Heating, Cooling, and Drying.

Göransson has computed formulas in connection with his invention of an apparatus for the cooling of the air, which allows one to judge of the results of heating, cooling, and drying the air, simply from a standpoint of mechanics and heat development.[1]

The results only of these formulas are here given, which may be of use in special calculations. The details can be found in the original.

t_1 is the temperature of the air at the pressure, p_1.

t_2 is the temperature of the air at a smaller or greater pressure, p_2.

Therefore $\frac{p_1}{1 + x t_1} = \frac{p_2}{1 + x t_2}$ where x is the co-efficient of the expansion of the air, $= \frac{1}{273}$.

As an example, let the absolute pressure be 2·36 atmospheres and the temperature of the air be reduced from 60° to 20°:

The new pressure is

$$p_2 = 2{\cdot}36 \frac{273 + 20}{273 + 60} = 2{\cdot}076 \text{ atmospheres.}$$

Let v_1 and v_2 be the volumes of air of the same density as the outer air sucked up in a unit of time by the blowing engine, and s_1 and s_2 the number of strokes, then, for the same diameter and stroke,

$$\frac{s_1}{s_2} = \frac{v_1}{v_2},$$

(1) *Ueber die Abkühlung des Bessemergebläsewindes.* E. F. Göransson, Stockholm, 1883.

and the results for the compression of the air in the unit of time are

$$\frac{s_1}{s_2} = \frac{v_1}{v_2} = \frac{\left(\frac{p_2}{p_1}\right)^{\frac{n-1}{n}} - 1}{\left(\frac{p_2}{p_1}\right)^{\frac{n-1}{n}} - 1}$$

The times, t_1 and t_2, required for the process are inversely proportional, that is,

$$\frac{t_1}{t_2} = \frac{s_2}{s_1}$$

Example: If with a pressure of 2.36 atmospheres and the air at 60° Cel. the time is 18 minutes, then if a cooling of the air to 20° Cel. is accomplished, the time will be:

$\left(\frac{n-1}{n} = \frac{2}{7}\right)$:

$$t_2 = \frac{2.076^{\frac{2}{7}} - 1}{2.36^{\frac{2}{7}} - 1} \cdot 18 = 15.03 \text{ minutes.}$$

Through the oxidation of the metal charge M, of which $\chi\%$ of iron, $\beta\%$ of carbon and $\gamma\%$ of silicon are lost (Göransson leaves the other elements out because he only wants to show a comparison), the heat communicated to the metal bath is $W = M\frac{\chi A + \beta B + \gamma C + (\chi k + \beta k_1 + \gamma k_2)\, t}{100}$,

in which A, B, C are the quantities of heat produced by the blast at 0° Cel. on the weight units of iron, carbon, and silicon, and k, k_1, k_2 are the constant additions of heat corresponding to the above heat quantities, for each degree of heat in the blast.

Example: If the unit of weight = 1 kilo,

$A = 722.4$, $k = 0.296$,
$B = 475.2$, $k_1 = 1.381$,
$C = 6174.2$, $k_2 = 1.183$,
the charge = 4.500 kilo.,
the loss of iron = 4.5%,
the loss of carbon = 3.5%, and
the loss of silicon = 2.0%.;

Then, putting $\frac{\chi A + \beta B + \gamma C}{100} = K$

and $\frac{\chi k + \beta k_1 + \gamma k_2}{100} = K_1$,

$W = M\,(K + K_1 \times t)$, in which
$K = 172.624$, $K_1 = 0.085315$.

With the air at 60°,

$$W_1 = 4500\,\frac{(172.624 + 0.085315 \times 60)}{18} - 25000 = 19436 \text{ calories;}$$

and, with the air at 20°,

$$W_2 = 4500\,\frac{(172.624 + 0.085315 \times 20)}{15.03} - 25000 = 29195 \text{ calories, if}$$

25000 calories is the loss of heat through radiation and conduction for the unit of time.

If the degree of saturation is exceeded, the amount of moisture decreases with the cooling off of the blast. This occurs all the more quickly, the nearer the air was previously to saturation with aqueous vapors.

If the density of the air at 0° Cel. and one atmosphere pressure $= \delta$, the specific gravity of the aqueous vapor (air $= 1$) $= e$, and v_0 the original volume of air, then the volume of air obtained by the cooling off of this contains $v_2 = \frac{v_0\,p_0\,(1 + x\,t_2)}{p_2\,(1 + x\,t_2)}$ of aqueous vapor.

If μ is the relative amount of moisture, S_0 the tension of the saturated aqueous vapor at $t_0°$ Cel. the amount of condensed vapors is:

$$\frac{V_0\,e\,.\,\delta}{1 + x\,t_0}\left(\mu\,S_0 - \frac{p_0}{p_2}.\,S_2\right)$$

The following shows that even a small amount of aqueous vapor exerts a considerable influence:

To heat a kilo of aqueous vapor from 60° Cel. (temperature of the blast) to 1000° Cel., requires $(1000 - 60)\ 0.4805 = 452$ calories; the decomposition requires $\frac{29638^1}{9} = 3293$ calories; and the heating of the hydrogen to 1400° requires $\frac{1}{9}\,(1400 - 1000)\ 3^2 = 133$ calories; total, 3878 calories.

On the other hand, $\frac{1}{9}$ kilo of oxygen produces $\frac{1}{9} \times 2584.6 = 2297$ calories. The result is a loss of $3878 - 2297 = 1581$ calories.

---

(1) The heat generated in the combustion of hydrogen to aqueous vapor, according to the nearest determinations, = 29638 calories.

(2) Medium value for constant pressure and constant volume = 3.

That a considerable amount of aqueous vapor is in reality introduced into the air in the Bessemer process is seen from the following:

The average amount of aqueous vapor in the air is 0.8% of the volume.[1] 150 to 200 cubic metres of air is introduced into the converter, per minute, or 370 to 400 cubic metres per ton of metal. (Rhine Steel Works 374, and Witkowitz 380 cubic metres.) So, for ten tons of metal, or 20 minutes blowing, there are 4000 × 0·8 = 32 cubic metres of aqueous vapor introduced.

Blowing in of Solid Materials with the Blast.

The objection to the introduction of heat-giving materials such as coal (anthracite dust, coke, or charcoal), disintegrated hydrocarbons (coal oil or tar), carbon oxide, etc., has been discussed elsewhere.[2] It needs here to be mentioned that the same experiments have been repeated in the basic process without better results; and further, all other materials in the form of dust, intended to replace the basic additions, and to liquefy the slag, proved a failure. Powdered limestone, dolomite, magnesia, raw or burnt, fluorspar, carbonate of soda, and all possible alkali salts, and compounds of manganese have been used.

It was thought that by their use the after-blow could be avoided, but it was found that the effect was decreased in proportion to the fineness of the powder, as it was simply blown out of the converter nose, by the nitrogen of the air which passes in bubbles through the metal.

---

(1) *Abthl.* II., p. 78.

(2) *Abthl.* III., p. 448.

CHAPTER V.

THE BASIC BESSEMER PROCESS.

DETAILS OF PRACTICE.

AFTER a converter is newly lined the changeable bottom is put on. The connection of the bottom to the converter proper is better made with keys than with screw bolts. Afterwards the lime is put in, according to one of the methods described on page 100. The lime is put in the turned-down or vertical converter after it has been heated to a bright red heat, or at least very well preheated, alone, or mixed with fuel, and burned under a slow blast. After the fuel is consumed the liquid iron is charged. Sometimes the converter is separately heated with coke, the ashes dumped out, the hot or preheated lime charged, and the iron poured in. The charging of the iron always takes place after the converter is turned horizontally, and either from a ladle which has been weighed, which is the most correct way, or from the cupola through runners, or from a receiver into which the movable cupola hearth [Neunkirchen] or the ladle which conveys the liquid iron from the blast furnace, was emptied [Hayingen]. After the charging of the iron is finished, the converter is turned to a vertical position and the blow commences. In a short time, at most after two minutes, the ordinary spectrum appears and always shows the calcium and magnesium lines very distinctly. The later details of the process are as different as in the acid process, and just as much dependent upon the quality and the temperature of the pig iron, the blast pressure, the amount of blast, and other things. In general the first period of the basic process shows a more violent ejection of sparks in comparison with the acid process, promoted by the ejection of lime dust. The second period shows a strong boiling, which continues also into the third

period. At the end of the third period the flame becomes short, as in the acid process, and the so called carbon lines, in reality manganese lines,[1] in the green field of the spectrum disappear, the sodium lines flash up at intervals only, but the lithium lines keep up continually. The after-blow now commences. Sometimes [Creusot] before the commencing of the after-blow, red hot lime [to the weight of 5 to 6% of the pig iron] is charged and mostly with an interruption of the blow. During this operation no special appearances in the spectrum are remarked. The flame shows some special features. After the disappearance of the spectrum it again becomes illuminated. If the dephosphorization is finished, it shows an appearance which resembles the fracture of coarse fibrous gneiss, shown in Fig. 39. Lenticular patches are formed which appear sometimes darker than the surrounding flame [Rotheerde] sometimes brighter [Angleur]. At the same time the red smoke characteristic of the combustion of iron begins to appear. If the pig iron used has a known composition, and the workmen have sufficient experience, a certain amount of air [measured by the size of the air cylinder and the revolutions of the blowing engines] relative to the amount of phosphorus is blown into the converter. Otherwise the converter is turned down after some time and a test taken,[2] which is flattened out under a special press or a steam hammer and broken. According to the appearance of this test, the process is finished or the blow still continued, and a second and sometimes a third test taken. The dephosphorization is finished, if the test after flattening out in a disk shows no cracks, and if the fracture shows dull silky but not a crystalline glittering diamond grain. The smallest amount of this, mostly located in the middle of the fracture, can be detected without difficulty by an eye at all experienced. If the dephosphorization is finished, the

FIG. 39.

Flame during the after-blow.

(1) Compare "*Schmiedbares Eisen*," Chapter III., p. 421.

(2) *Abthl.* III., p. 398.

slag is generally poured off and the spiegeleisen in a liquid state and the hot ferromanganese are charged into the converter. But in practice all the modifications described on p. 95 are used. The slag is often only skinned with lime and not poured off; sometimes the spiegel and ferro are charged into the converter after the slag is poured off; frequently it is put into the ladle in one or several charges. In both of the latter cases, if the slag is not previously entirely poured off, the heavy boiling causes it to flow over the ladle.

After all the metal is poured out, the converter is turned down and the slag still remaining blown out. The converter is then turned into such a position that the bottom and lining can be inspected. All the necessary repairs with lime-tar,[1] the changing of the tuyeres,[2] or of the whole bottom takes place. This requires about three-quarters of an hour. After that the operations commence again. The slag is usually hauled away under the cupola house and the steel immediately poured into the moulds.

Duration of the Process.

The duration of the basic process is generally shorter than in the acid process. It takes from 13 to 25 minutes or an average of 18 minutes divided as follows: Two minutes for the refining [desiliconization], 11 minutes for the decarbonization and 5 minutes for the after-blow. If 5 minutes are reckoned for the charging of the lime, 5 minutes for the addition of the recarbonizer, and 7 minutes for the pouring, it takes altogether 40 minutes, and it would be possible to make, if no repairs for the bottom were necessary, 38 heats in 24 hours. But the repairs on the bottom take so much time that very seldom more then 30 heats, mostly 20 to 24, but often only 14 to 15 are made in 24 hours. The putting on of a bottom generally takes 45 minutes. [22]

Capacity of the Converter.

Before the introduction of the basic process the most

(1) See page 61.

(2) See page 78.

convenient size of a converter was for a capacity of 10 tons. In the basic process it was found necessary to reduce the charge down to 5.6 to 6 tons with the use of the same converter. The new basic plants are made for a larger capacity, as at Peine,[1] where each converter holds 9 to 10 tons, and this proved very satisfactory. The converters at Middlesbrough are calculated for 15 tons.[25]

Waste.

The waste or loss varies according to the amount of foreign elements in the iron, chiefly silicon, manganese, phosphorus, and carbon. It further depends on the amount of oxidized iron which goes into the slag.[2] On an average, the waste is 14% of the pig iron, but sometimes it reaches 17 to 18%. It varies from 11 to 19%.[3] [24] The loss in the cupola which is included, amounts to 3%.

Arrangements for Pouring.

The arrangements for pouring are in a general way the same as those used in the acid process.[4] The casting ladle rests on an hydraulic crane, which swings around the centre of a circular or segmental casting-pit, or a locomotive crane transfers it to the casting house. The casting ladle used at Peine and at Friedenshütte is shown in Fig. 40. The lining and the stopper sleeves are not shown. Generally several ladles are kept ready for emergencies. With necessary care one ladle ought to last [Teplitz] from 120 to 200 heats. When the pour is finished the inside of the ladle is cooled off by water, mostly through fine sprays; at Teplitz through filling it up entirely with water after the nozzle hole is plugged up. When the ladle is sufficiently cooled off, a new nozzle is put in, and when it is otherwise repaired, it is dried again, sometimes with gas and sometimes with a coke or coal fire.

---

(1) Compare page 79.

(2) Generally 400 to 500 lbs. of slag are counted for 1000 lbs. of ingots.

(3) Compare also Iron and Steel, 1881, II.

(4) *Abthl.* III., p. 355.

CASTING LADLE AT PEINE (WITHOUT LINING). SCALE — 1:25.

FIG. 40.

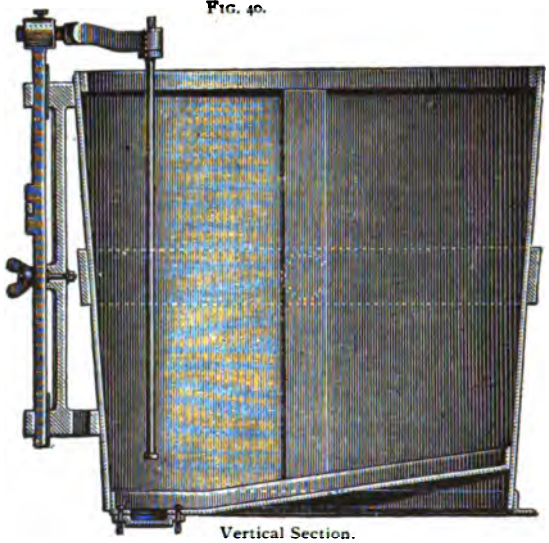

Vertical Section.

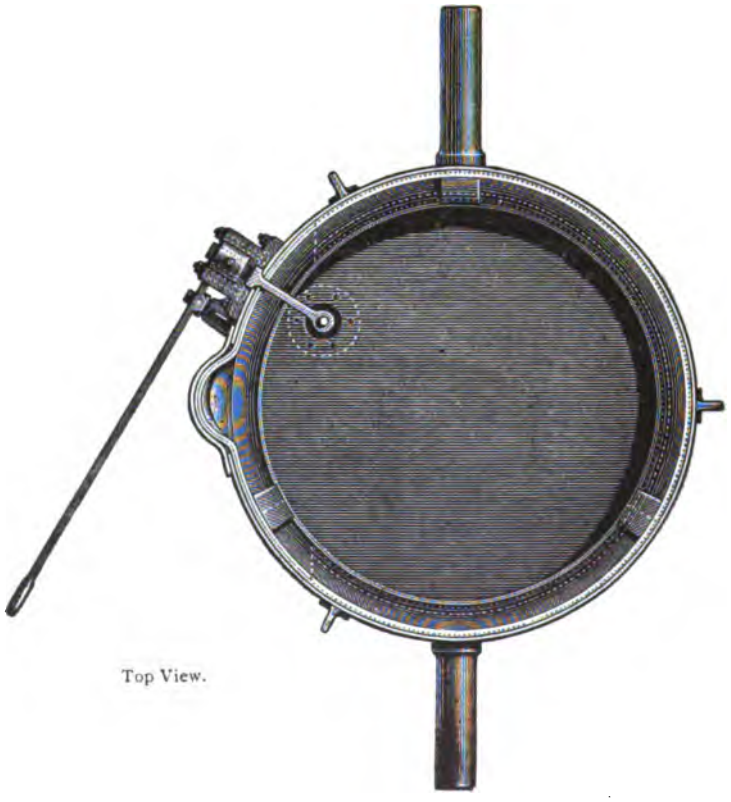

Top View.

Some peculiarities in pouring, which can just as well be used in the acid process, but which were introduced in the basic process, are described below:

Funnel Casting:—To get uniform castings a funnel is attached to the casting ladle with a hook or chain. This funnel is guided by a long handle and fits closely to the opening of the moulds. The stopper is opened just sufficiently to keep the funnel always equally full. The steel runs into the moulds in an uninterrupted stream and always under the same pressure.

Means for preventing the steel rising in the moulds:—Another peculiarity is the closing of the moulds with heavy iron covers, convex on the lower surface. These covers do not fit tight to the sides of the moulds, but they force the steel up around them in a thin layer. They contribute to the compactness of the ingot end. They are covered like the usual iron plates with sand.[1] Of the other ways to keep the steel under pressure, the use of carbonic acid,[2] proposed by F. Krupp in Essen, will alone be mentioned. [25]

To cast ingots of a certain determined weight, Kladno uses to advantage a weighing apparatus (shown in Figs. 41 to 46). The patent (No. 10828) for this arrangement, invented by Moro at Kladno, gives the following description: Each form [flask or mould] in which the steel is poured is connected during the pouring with a measuring apparatus, which shows reliably during the pour when a certain weight of steel has been poured into the mould. This measuring apparatus is connected with the mould before or during the pour in such a way that the flasks or moulds rest on the measuring apparatus during the pour. Immediately after the finish of the pour, the measuring apparatus is removed and placed under another mould. Besides this, it must be possible quickly to withdraw the whole measuring apparatus in case of danger, that is, if the bottom plate of the mould melts through, or if it is not tight, as in these cases the measuring apparatus would be damaged by the overflowing

(1) *Abthl.* III., p. 653. Compare also Siemens' patent, 12037.

(2) Ledebur,—*Eisenhüttenkünde*, III., p. 822.

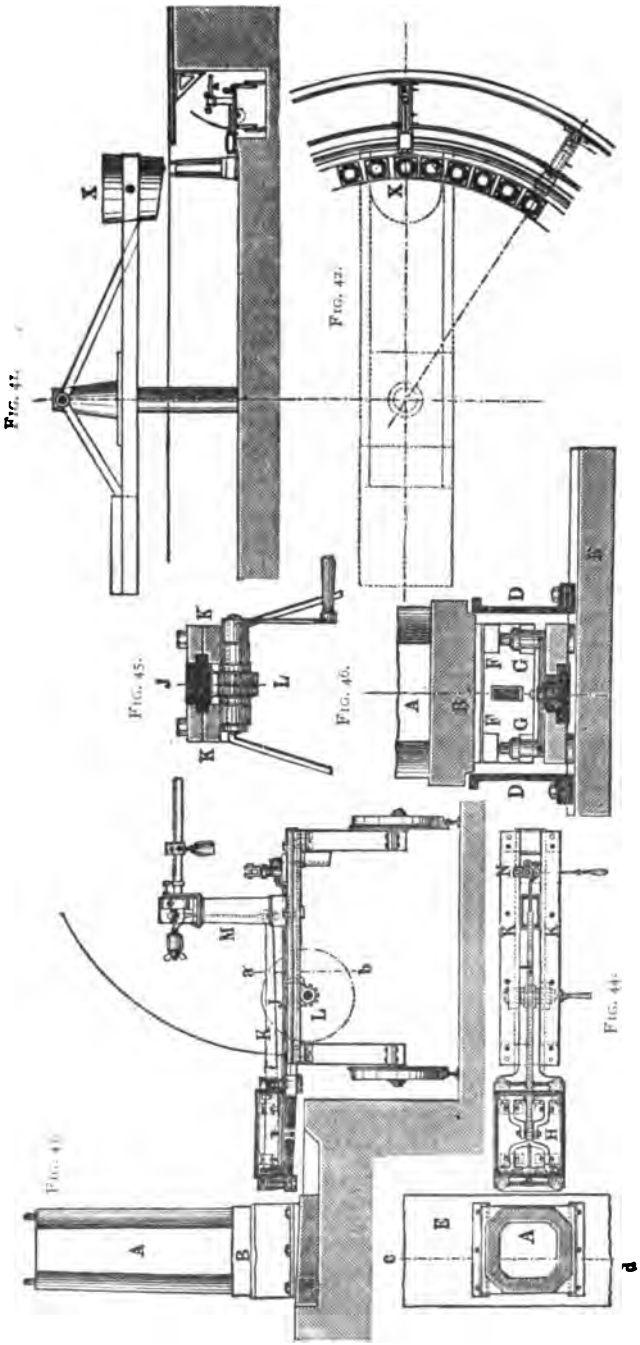

APPARATUS FOR WEIGHING STEEL INGOTS BEFORE THE CHILLING.

metal. The essential points of the weighing apparatus are as follows:

1. The weighing apparatus can be pushed forward or backward. It is pushed forward if an ignot has to be weighed, and withdrawn after the weighing is finished, or in case the apparatus is in danger.

2. The weighing beam can be raised by separate contrivances, by which the moulds are also raised and rest only on the weighing beams.

3. If the moulds are stationary in the pit, the whole weighing apparatus moves on a track and can be placed exactly in front of each mould, and the weighing beams introduced in the right place gradually and easily during the pour. Figs. 41 and 42 show views of an elevation and ground plan. Figs. 43 and 44 show an elevation and a horizontal section of the scale. Figs. 45 and 46 are sections *a b* and *c d* of the above figures. The moulds, A, are usually located on the bottom plates, B, and rest on the "U" shaped irons, D, which are screwed on a plate, E, which underlies several moulds. By this arrangement sufficient room is provided for the introduction of the weighing beam. This consists of a beam scale whose frame rests on four plungers, G. Their cylinders are fixed to the introducing frame, H. The handle of this frame forms a rack, J, which is guided in the movable frame, K, and can be moved forward and backward with the pinion, L. This rack carries on its back the housings, M, of the scale and a small hydraulic pump, N. This pump is connected with the four small cylinders, G. The weighing is performed in the following way: The moulds in a Bessemer steel plant are usually arranged in a circle described by the steel ladle, or, in some works, in a straight line, if the ladle is mounted on a carriage instead of a central crane. The weighing apparatus is the same in both cases. In the first case it runs on a curved track and in the latter case on a straight track. During the blow, the scale is placed in succession before each mould and pushed with the pinion and rack [at Kladno with two turns of the crank] under the moulds. The inclined surface of the introducing frame, H,

comes in contact with the inclined bottom of the bottom plate, E. Three strokes of the pump suspend the mould on the scale, Fig. 46. The tapered recess on the bottom plate facilitates an easy lifting, and the swinging is limited by projections on the scale frame. At first the empty moulds are weighed. After each weighing the outlet valve of the pump is opened and the water returns into a small tank. The scale is pulled back and moved to the next mould. The weighing of the empty moulds takes about five minutes. The required weight of the ingots is now added to the weight of the empty moulds. By this time the heat is ready to be poured. The slide is put on the total weight required, and the mould is filled with steel until the scale shows the required weight. The use of this apparatus does not delay the casting as the steel can be running into the second mould while the scale is still under the first one. It is soon enough to put the scale under the second mould when nearly the proper quantity has been cast, because the introduction of the scale does not disturb the casting, and both these operations can go on simultaneously. If an accident happens, such as steel melting through the bottom plate, or the stopper not closing tight, the weighing apparatus has to be removed and taken to a safe place. A slight spattering of liquid steel does not matter, as the scale is entirely closed up, and it, as well as the weighmaster, is protected by a shield. All parts of the scale are easily accessible, in full view, and the room required is small. [26]

Cranes.

The use of hydraulic power for all the machinery in a Bessemer plant is so popular that steam is only seldom used. The water is collected in accumulators, which were worked in the early days to 150 lbs., afterwards from 180 to 270 lbs., and have now from 375 to 450 lbs. pressure per square inch.[1] The accumulator is also connected to the ingot cranes.

(1) Compare Daelen, *Die Hydraulik in den Bessemerstahlwerken*; Glaser's *Annalen für Gewerbe und Bauwesen*, 1880, II., p. 239. An accumulator weighing 15 tons needs 218 cubic feet of water.

The conditions for the central crane which carries the casting ladle are,[1] an easy swing and a safe and correct stop of the ladle for each mould. The ease of the swing decreases with the length of the jib; this is the reason why it is seldom more than 15 feet long.[2] The consumption of water need not be considered, because this crane makes only two or three strokes for each heat. It has proved more advantageous to separate the casting house from the converting department. Bochum has a middle crane which sets the ladle on a carriage. This carriage transports the ladle to two radial pits.[3] At the Northeastern Steel Works near Middlesbrough, the converters have one casting ladle which pours its contents into a second ladle. This ladle fills the moulds, which are situated in a circular pit, 60 feet in diameter. At Rhymney the ladle is transported on a carriage to the central casting crane. At Hörde a straight pit similar to the one used at the open-hearth steel works is placed at one side.[4] A separate casting house was erected at Peine, and a similar idea was carried out at Friedenshütte and Königshütte. The casting crane is put on a carriage with six wheels as shown in Figs. 47 and 48.[5] The cylinder, A, of the hydraulic crane is movable and the plunger fixed. The ladle [for 10 tons] is balanced with counterweights and can be moved for about 39″ in a horizontal direction. The crane has a swing of 7 ft. 4½″ and a lift of 39.″ On one side of this casting-arrangement occupying the half of the carriage, is a tubular boiler, C, constructed for 10 h. p. and 90 lbs. pressure. The ladle can be swung around with a chain. The carriage itself is moved by a steam-engine and runs on a track from the converting department to the casting-house. The tilting, the push-

(1) Compare R. M. Daelen's "*Über Bessemerkrähne*," *Stahl und Eisen*, 1883, p. 667.

(2) Exceptionally 22 feet.

(3) Glaser's *Annalen*, 1881, I., pp. 388 and 411.

(4) Comp. *Abthl.* III., p. 540.

(5) *Neuer Giesskrahn, ausgeführt von der Märkischen Maschinenbauanstalt*, *Stahl und Eisen*, Vol. II. No. 9.

ing out, and the drawing back of the ladle can be performed by steam or by hand; but it would be better to make those movements by the more exact working hydraulic machinery.[1] In addition to the crane which

FIG. 47.

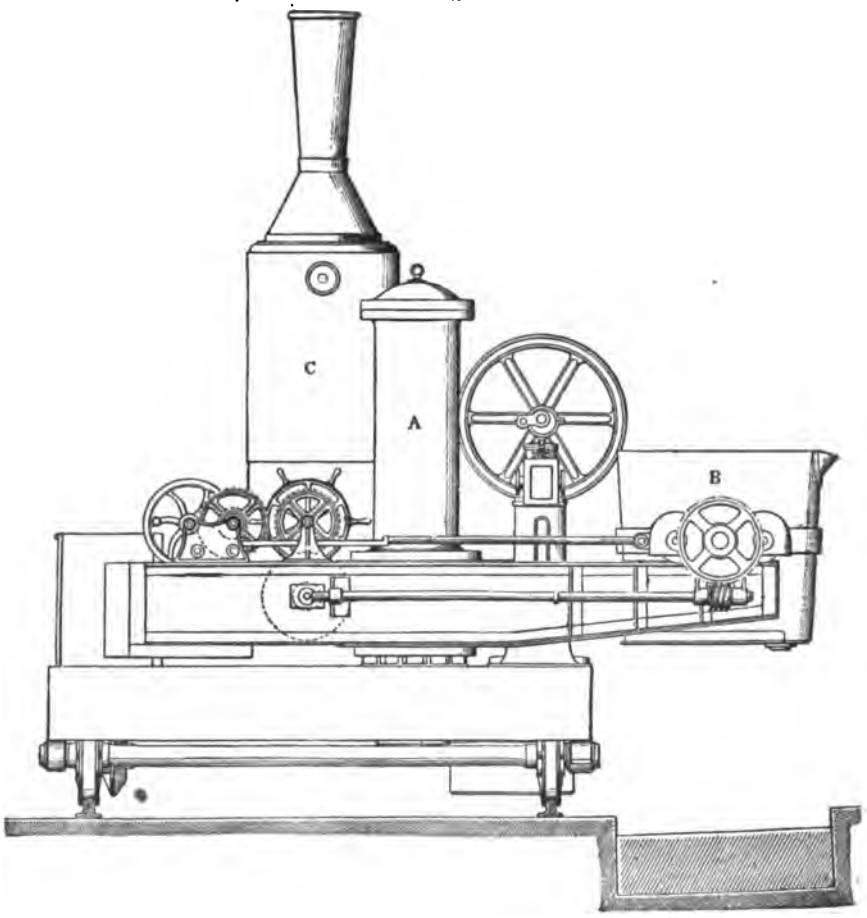

LOCOMOTIVE LADLE CRANE AT PEINE—VIEW.

carries the ladle and which is situated in the centre of the pit or mounted on a carriage, hydraulic cranes are used for

(1) *Verh. d. Vereins zur Beförderung d. Gewerbfl.*, 1883, *Sitzungsberichte*, p. 338.

the setting and removing of the moulds, the ingots, and for loading the ingots, and for charging them in the soaking pits. The water consumption of those cranes must be taken into consideration, as they make from 1,000 to 2,000 lifts every 24 hours. The conditions for those cranes are:

FIG. 48.

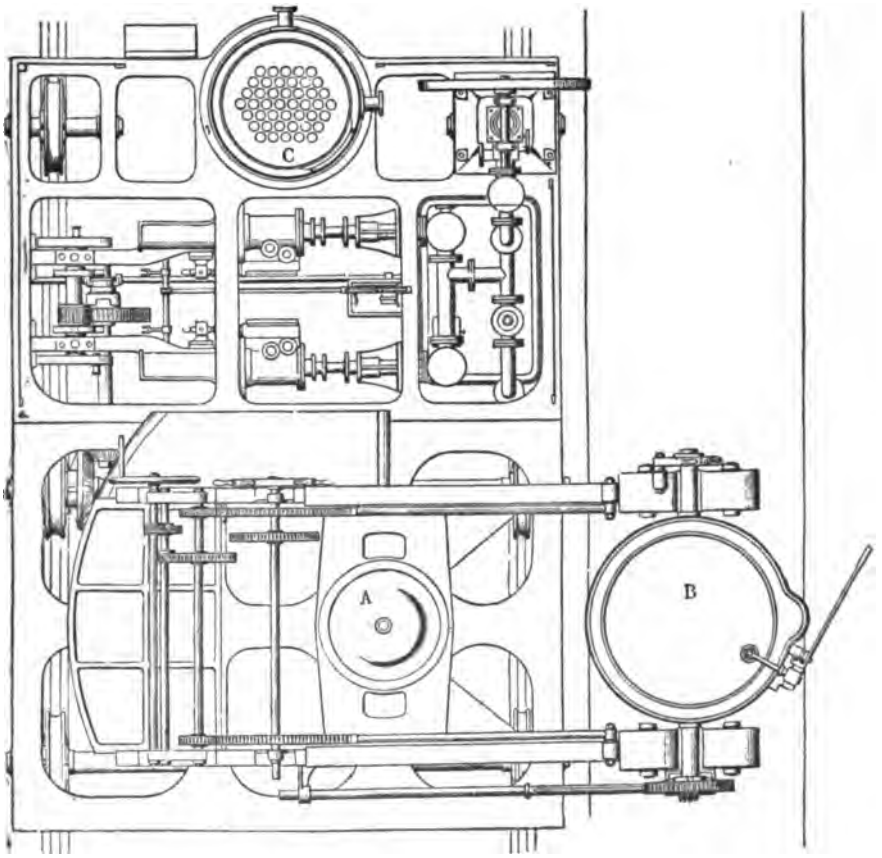

LOCOMOTIVE LADLE CRANE AT PEINE—TOP VIEW.

Great speed of lift, easy swing, economical water consumption, simple and strong construction. To fulfil these conditions the following construction ought to be chosen: 1. The piston area on which the hydraulic pressure acts

must be in proportion to the load and independent of the strength of the column which transfers the strain to the foundation. 2. The dead weight to be lifted must be small. 3. The stuffing boxes must be arranged above ground and must be packed from above. 4. The side friction must be diminished through suitable arrangements.

According to Daelen's opinion, the American crane which has a mast guided in the roof answers the above conditions best. This arrangement requires wall and roof construction of sufficient strength.

Daelen has tried to secure a second guiding point without using the roof. The cylinder, A, Fig. 49, is connected with the foundation. The plunger, B, carries a connecting beam, C, with the jib, D, and the four rollers, E, which run on the flanges of the beams, F. The beams are connected with the crane jacket, G, which rests on the cylinder, A. The distance rollers, H, allow an easy swing. The beams, F, are connected on the top by a plate carrying a pin, J. This pin is connected with the walls through the tie-rods, K. Daelen calls attention to the fact that the plunger is not subject to bending strain, that the dead load is very light, and that the side friction between the plunger and cylinder is neutralized and the connection between the crane column and the walls made without reinforcing the roof construction.[1]

Treatment of the Ingots.

The ingots are stripped from the moulds, in the same way as in the acid process. The moulds are, for an easier stripping, coated on the inside with a wash of paraffine, blacklead, or milk of lime. Generally the ingots are reheated from the outside in a heating furnace,[2] and after they are uniformly heated through they are rolled out to the required sections. These heating furnaces, which use gas,

(1) Compare the articles on hydraulic cranes in *Stahl und Eisen*, 1883, pp. 670, 671, and 673.

(2) Compare *Schmiedbares Eisen*, pp. 711 and 824.

or a direct coal fire have a sufficient capacity suitable for the output of the rolling mill.

FIG. 49.

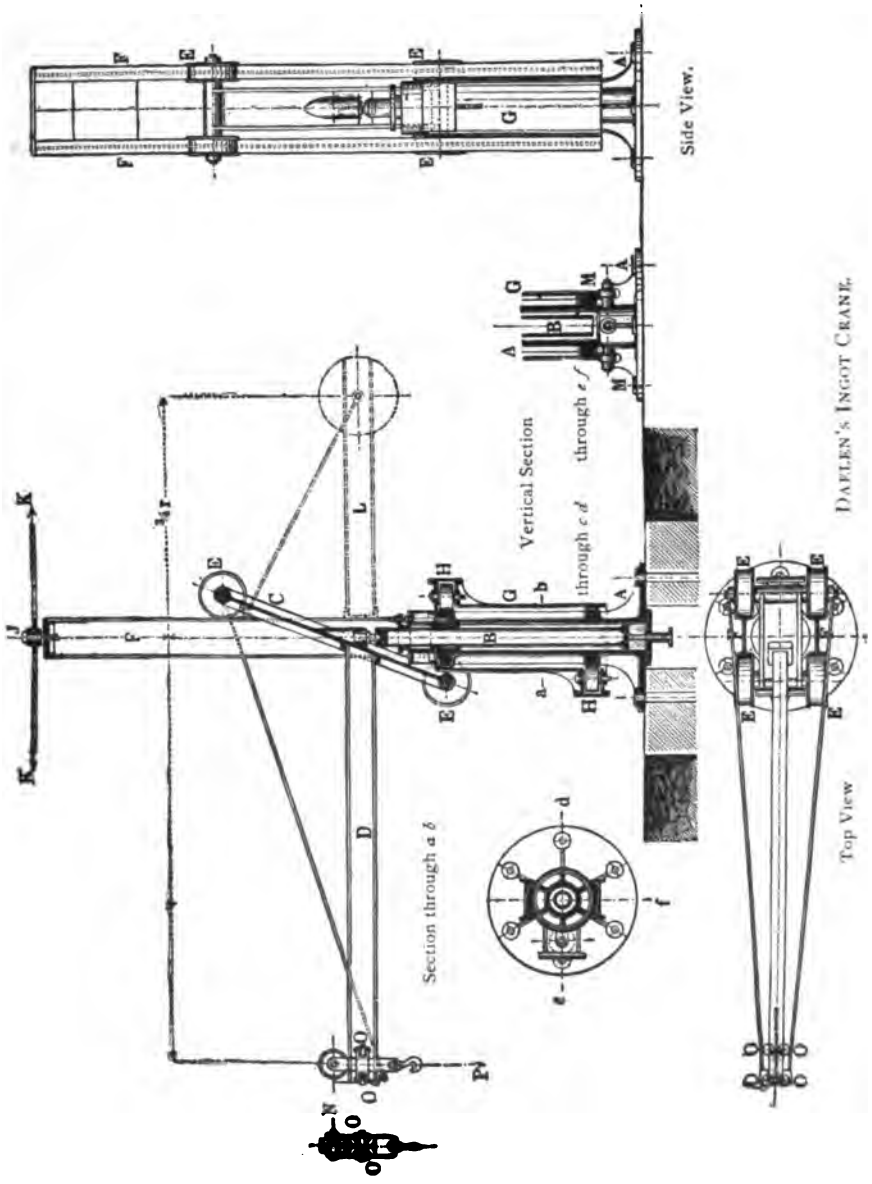

The heating furnace at Kladno which has two inclined grates for coal fire, has room for 80 ingots which are charged in two rows and remain 10 hours in the furnace. To avoid as much as possible a loss of the original heat, in the United States the ingots, loaded on the cars, are covered with sand or other nonconductor of heat and hauled immediately to the rolling mill. It was not possible to get a uniform heat in that way through the whole ingot. Therefore it was a fortunate idea of the Englishman Gjers to supply the necessary heat in the following manner: He puts the ingots, just hardened on the outside, into pits or boxes which have very thick fire-brick walls. The ingots give some of their heat to the walls but the temperature of the ingots gets thoroughly equalized. Gjers calls those pits, at first mentioned at the meeting of the Iron and Steel Institute at Vienna in 1882, soaking-pits. The name given in the German patent is better—" equalizing pits." The equalizing pits economize of course the coal necessary for heating the ingots in a reverberatory furnace but do not do away with the coal used to raise steam. The outgoing gases of the heating furnaces are used to raise steam and about ⅔ of the total heat produced is used for that purpose. For this reason the saving resulting from the use of equalizing pits is not so very great. At Rotheerde 300 lbs. of coal heats 1,000 lbs. of steel ingots in a reverberatory furnace. If the outgoing gases were not used, 250 lbs. of coal would be necessary under the boilers. According to the first patent of John Gjers in Middlesbrough (D. R–P. 21716) each ingot has its own chamber. The chambers, *d d*, Fig. 50, are situated in a double circle near the casting pit, so that the same crane can take the ingots out of the casting pit and put them into the equalizing chamber. Each chamber has a separate sliding lid lined with fire-brick, which slides on the iron plates of the floor. Already in his first patent, which runs from the 9th of May, 1882, Gjers proposed instead of a pit in which the ingots have to be inserted, a clay cover which is put over the ingot standing on the floor. In a supplementary patent (D. R–P. 22803) Gjers takes horizontal cells, movable cells which are shown in

Figs. 51, 52 [with different lids *t*, *u*, *v*, *x*], and finally a canal lined with fire-bricks and driving rollers on the floor, Fig. 53.[1] All these arrangements serve the same purpose

FIG. 50.

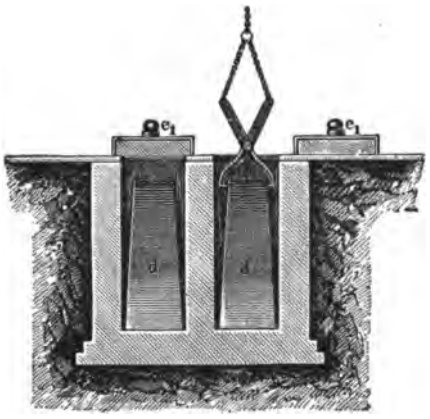

SOAKING PITS.

and do not change the principal idea. Practically only the carriage can be used, because it saves the most heat during the transportation to the rolling mill. Cooper at Linthorpe (R–P. 25436) changed the canal to a complete tunnel connecting the casting pit with the rolling mill. In another supplementary patent, Gjers shows that the brick lining of the cells, which cracks very easily, can be very well replaced by a hollow steel lining.

To protect this steel lining against a too quick oxidation it is necessary to have in the inside of the chamber a reducing atmosphere produced by the combustion of pure coal. This makes the whole operation very cumbersome and hardly practicable for actual use. Cockerill at Seraing (R–P. 24974) thought of maintaining the required heat in the equalizing chambers by the combustion of gases which are introduced in the separate cells. It would in this case,

(1) This figure shows at the same time the general arrangement in respect to the situation of the converters, F, and the rolling mill, G.

without doubt, be preferable to use the simple reverberatory furnace.

FIG. 51.

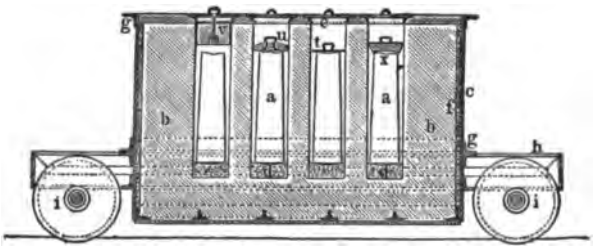

SOAKING PITS ON WHEELS—(SECTION).

FIG. 52.

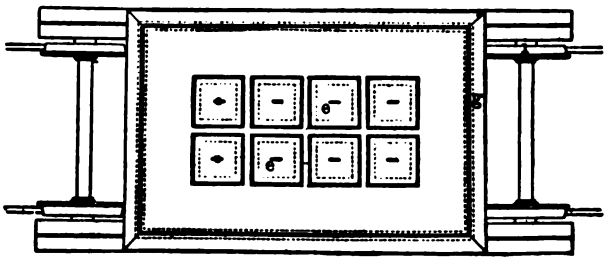

SOAKING PITS ON WHEELS—(TOP VIEW).

Division of the Process.

The difficulty which arose in the first days of the process from the great amount of slag, led Harmet, an engineer of Lyons, to recommend the division of the basic process into two parts (R–P. 8549); to desiliconize and partly or entirely to decarbonize the iron in a converter lined with acid material, and to pour this metal in the liquid state into another converter lined with basic material. The metal by this operation was to be separated from the acid slag and then dephosphorized in the second converter. This process promised to show some success, and the first arrangements of the Hörde basic plant were made, so that this operation could be easily performed. After all, it would have been very costly, as the transferring requires a great deal of time and labor, and it was fortunate that the operation of trans-

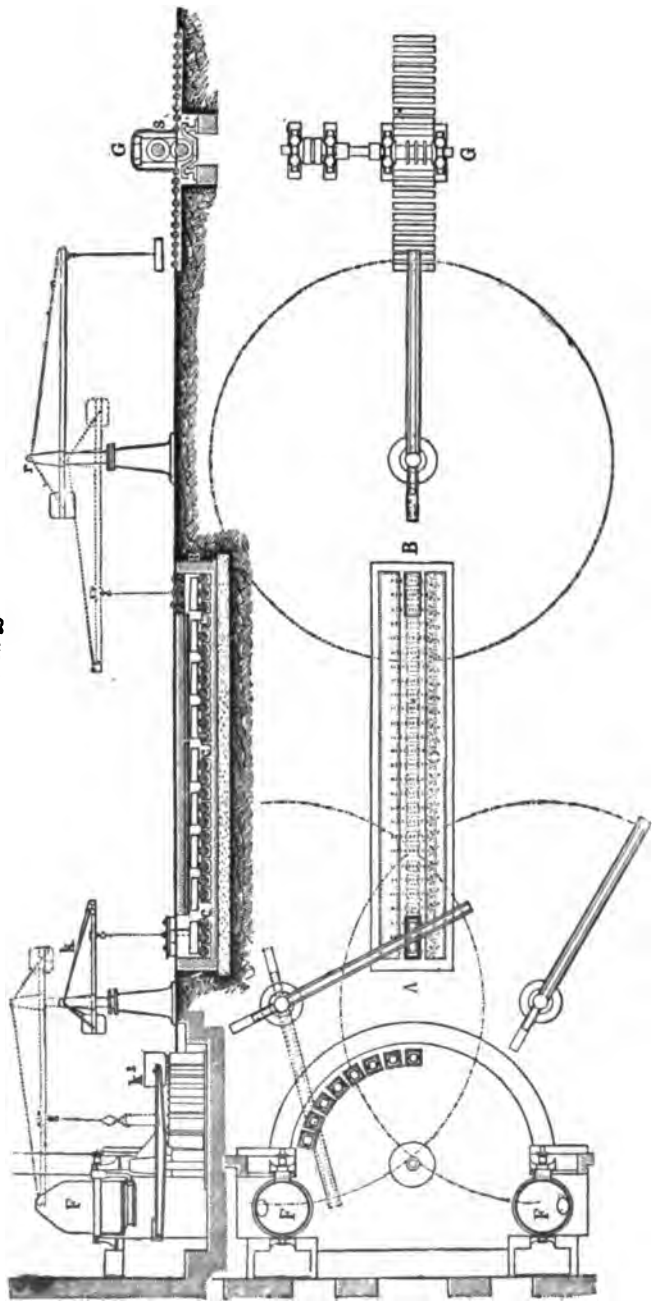

FIG. 53.

EQUALIZING CANAL FOR BESSEMER INGOTS.

ferring was found to be unnecessary. The transfer could be made from one converter, which had been raised with a crane, direct into the other one, or, as it would have been necessary in actual practice, by means of a ladle. It was even proposed to divide the process into three parts: to dephosphorize in a basic converter, to desiliconize and decarbonize in an acid converter, and to deoxidize and recarbonize in a second acid converter. Finally, the proposition ought to be mentioned,—first to dephosphorize after the Krupp process and to decarbonize in an acid converter, or first to decarbonize in an acid converter and after that to dephosphorize in a Krupp apparatus.

All these propositions are now, with all the progress made in the basic process, of no more value than the connection of the Bessemer with puddling process proposed by the author [*Abthl.* II., p. 463].

CHAPTER VI.

THE CHEMICAL AND PHYSICAL REACTIONS.

SECTION I.—CHEMICAL PHENOMENA.

THE chemical reactions that take place in the dephosphorization of pig iron in the basic converter are sufficiently established by numerous analyses of samples taken at intervals of some minutes, to furnish a clear insight into the process.

The most important of these investigations afforded the following results:

I. FINKENER'S INVESTIGATIONS.[1]

a. Thomas-furnace of the Rhine Steel Works at Ruhrort, Heat No 125.

Charge:

6000 kilos (6.6 tons) of pig, composed of { Ormesby, 2500 kilos (2.75 tons), Ilsede, 3000 kilos (3.3 tons), Hollrich, 500 kilos (1100 pounds),
300 kilos (660 pounds) of spiegel,
50 kilos (110 pounds) of ferromanganese,
1080 kilos (2376 pounds) of dolomitic lime.

Yield: 5597 kilos (6.1567 tons) of ingots = 88.3% of the charge, and 975 kilos (2145 lbs.) of slag.

The phosphorus-content of the iron mechanically enclosed in the slags of heat No. 125, Nos. 1 to 10, was as follows:

---

(1) *Mittheilungen aus den Königl. technischen Versuchsanstalten zu Berlin*, 1883, p. 28, *et seq.*

	%	%	%
No. 1	2.16		2.26
No. 2	2.18		2.20
No. 3	1.72		1.79
No. 4	2.00		1.74
No. 5	1.97		1.72
No. 6	0.53		1.30
No. 7	1.73		3.84
No. 8	0.09		0.14
No. 9	0.26		0.97
No. 10	0.23	0.30	0.92

ANALYSES OF THE IRON.

	Si	C	P	S	Mn	Ni	Cu
	%	%	%	%	%		%
Average of 3 samples taken from the runner after the charging of			2.181				
$\frac{1}{3}$, $\frac{1}{3}$, and $\frac{1}{3}$ of the pig iron.....	1.22	3.21	2 185	0.080	1.03	0.08	0.02
After blowing for 2 mins 46 secs. No. 1.....	0.72	3.30	2.148	0 047	0.71	0.07	0.02
After blowing for 5 mins. 21 secs. No. 2.....	0.15	3.12	2.224	0.051	0.50	0.06	0.02
After blowing for 8 mins. 5 secs. No. 3.....	0.007	2.47	2.157	0.049	0.18	0.07	0.02
After blowing for 10 mins. 45 secs. No. 4.....	0.012	1.49	2.096	0.051	0.16	0.07	0.02
After blowing for 13 mins. 28 secs. No. 5.....	0.005	0.75	2.053	0.051	0.14	0.07	0.02
After blowing for 15 mins. 13 secs. No. 6.....	0.008	0.05	1.910	0.055	0.01	0.07	0.03
After blowing for 19 mins. 14 secs. No. 7.....	0.005	0.02	0.230	0.060	0.01	0.06	0.02
After blowing for 19 mins. 31 secs. No. 8.....	0.005	0.02	0.139	0.055	....	0.07	0.02
After blowing for 19 mins. 49 secs. No. 9.....	0.004	....	0.087	0.056	....	0.05	0.03
Spiegel (spiegel and ferro manganese).....	0.28	5.18	{ 0.097 } { 0.096 }	0.010	13.06	0.11	0.24
Ingot Iron (rail steel) No. 10.....	0.01	0.26	{ 0.148 } { 0.142 }	0.045	0.48	0.06	0.03

The analyses of the slags pertaining to this heat are given on the following page.

The figures given under the term basicity are derived from those given in the other columns, as the following example (slag No. 5) will show:

$$1.61 = \frac{\frac{8.42}{72} + \frac{8.51}{71} + \frac{44.37}{56} + \frac{7.34}{40}}{\frac{16.64 \times 2}{60} + \frac{7.15 \times 3}{142} + \frac{1.29}{102,8} + \frac{4.95}{160} + \frac{0.12}{80} + \frac{0.13}{32}}$$

ANALYSES OF SLAGS FROM HEAT NO. 125 AT RUHRORT.

NUMBER	SiO_2	P_2O_5	Al_2O_3	Fe_2O_3	SO_3	S	FeO	MnO	CaO	MgO	Basicity.
	%	%	%	%	%	%	%	%	%	%	
1	41.15	0.84	1.12	....	0.06	0.25	2.40	9.03	41.27	4.13	0.71
2	36.30	3.12	1.30	0.46	0.05	0.10	3.97	11.02	39.5	3.39	0.77
3	34.41	2.99	1.08	0.13	0.09	0.13	3.60	10.72	42.8	3.35	0.86
4	31.94	4.02	1.00	0.74	0.05	0.05	4.23	9.94	43.12	4.01	0.92
5	16.64	7.15	1.29	4.95	0.12	0.13	8.42	8.51	44.37	7.34	1.61
6	14.65	11.60	1.35	3.84	0.15	0.12	7.15	7.39	46.63	6.34	1.54
7	12.94	18.83	1.07	3.74	0.07	0.07	5.84	4.25	47.76	6.00	1.32
8	12.20	18.66	0.64	2.80	0.03	0.09	6.79	4.01	48.59	6.26	1.42
9	11.71	18.15	1.01	2.78	0.05	0.09	7.19	4.05	48.19	6.38	1.46
10	12.77	16.92	1.12	2.87	0.13	0.05	5.94	4.8	47.87	6.75	1.44
Cupola before tapping.	43.11	0.67	9.61	0.93	0.12	0.35	3.72	4.42	33.57	3.21	....
Cupola after tapping..	42.08	1.00	10.81	0.85	0.04	0.48	6.28	5.66	29.5	3.65	....
Slag from spiegel..	36.56	0.044	11.57	....	0.05	0.40	0.78	19.80	28.97	1.92	....

b. Thomas-furnace at Hörde, Heat No. 31.

Charge:

2525 kilos (2.777 tons) of white puddlings (Hörde) (*weiss puddlings*), (forge-pig),
905 kilos (1991 lbs.) of gray-ordinary (*grau ordinair*), (foundry-pig),
180 kilos (396 lbs.) of spiegel,
40 kilos (88 lbs.) of ferromanganese.

Analyses of the Iron.

	Si	C	P	S	Mn	Ni	Cu
	%	%	%	%	%	%	%
Average of 3 samples taken from the runner after the charging of $\frac{1}{3}$, $\frac{2}{3}$, and $\frac{3}{3}$ of the pig iron...	0.56	3.12	1.398	0.42 0.41	0.41	0.07	0.04
After blowing for 5 mins. 0 secs. No. 4.....	0.01	2.51	1.442	0.44	0.18 0.17	0.08	0.04
After blowing for 7 mins. 30 secs. No. 5.....	0.006	1.73	1.400	0.44 0.42	0.19	0.08	0.04
After blowing for 9 mins. 0 secs. No. 6.....	0.008	1.19	1.354	0.42	0.21	0.07	0.05
After blowing for 12 mins. 0 secs. No. A.....	0.005	0.07	1.069	0.47	0.11	0.06	0.05
After blowing for 13 mins. 15 secs. No. B.....	0.001	0.03	0.524	0.46 0.46	0.07	0.07	0.05
After blowing for 13 mins. 55 secs. No. C.....	....	0.08	0.132	0.47 0.25 0.24 0.25	0.10	0.07	0.05
After blowing for 14 mins. 15 secs. No. D.....	....	....	0.066	0.21	0.07	0.04	0.05
Half-blown No. E.....	0.001	0.07	0.046	0.18 0.22	0.06	0.08	0.04
Spiegel (spiegel and ferromanganese).....	0.74	4.70	0.130	0.005	8.60	0.09	0.40
Half-blown ingot iron (rail steel).....	0.003	0.20	0.067	0.15	0.31	0.06	0.06

Analyses of Slags from Heat 31 (Hörde).

	SiO_2	P_2O_5	CaO	MgO	MnO	FeO	Fe_2O_3	Al_2O_3	CaS	SO_3	CuO
	%	%	%	%	%	%	%	%	%	%	%
Slag from Cupola..	52.96	0.11	19.63	2.12	4.31	4.36	1.25	12.80	0.47	0.40	0.04
Average of final slag freed from 3.1% met. iron.....	11.47	12.11	51.32	4.78	3.53	8.31	3.19	2.37	3.18	0.20	0.01

Analyses of Basic Materials, Stone, and Fluxes.

	SiO_2 + Clay	Al_2O_3	Fe_2O_3	FeO	MnO	CaO	MgO	CO_2	SO_3	P_2O_5	H_2O	K_2O Na_2O
	%	%	%	%	%	%	%	%	%	%	%	%
Wertheim Dolomite, ground and sifted	2.54	0.74	1.70	..	0.62	35.14	14.91	44.0	0.09	0.04	0.86	....
Rathinger Dolomite, burned...	0.63	0.10	1.33	..	0.24	54.51	39.33	0.54	0.13	0.07	2.53	....
Basic stone, from Hörde.....	SiO^2 5.65	1.40	3.10	..	1.16	54.37	33.01	0.10	0.11	0.11	0.70	0.49
Burned lime.....	0.82	0.62		..	....	89.05	3.05	5.37	0.42	0.01	1.01	....

c. Thomas-furnace at Hörde, Heat No. 30.

Charge:

2800 kilos (3.08 tons) of white puddlings (forge-pig),
1010 kilos (2222 lbs.) of gray-ordinary (foundry-pig),
180 kilos (396 lbs.) of spiegel,
40 kilos (88 lbs.) of ferromanganese,
700 kilos (1540 lbs.) of lime.

ANALYSIS OF SLAG.

	SiO_2	P_2O_5	CaO	MgO	MnO	FeO	Fe_2O_3	Al_2O_3	CaS	SO_3	CuO
	%	%	%	%	%	%	%	%	%	%	%
Average of slag freed from 6.1% met. iron	12.07	11.74	55.94	5.37	2.48	6.08	1.91	1.96	2.88	0.12	....

II. KUPELWIESER'S INVESTIGATIONS.[1]

a. Thomas-furnace at Hörde, Heat of Dec. 31st, 1879.

The charge was 3400 kilos (3.74 tons) of pig, which was remelted in a cupola with 14% of coke.

ANALYSES.

Ingredients.		Pig.	1	2	3	4	Final product.
After minutes.....		0	4.25	9.25	11.25	13	
		%	%	%	%	%	%
Iron	Carbon.....	2.940	2.480	0.811	0.049	....	....
	Silicon.....	0.531	0.009	....	....	....	....
	Phosphorus.....	1.220	1.250	1.320	0.786	0.021	....
	Manganese.....	0.611	0.247	....	....	0.123	....
	Copper.....	....	0.111	....	....	0.119	....
	Sulphur.....	0.152	0.206	0.277	0.262	0.206	0.133

(1) *Oesterr. Zeitschrift für Berg- und Hüttenwesen*, 1880, p. 381.

b. Thomas-furnace at Witkowitz, Heat No. 9634.[1]

Charge:

4200 kilos (4.62 tons) of mottled-pig,
170 kilos (374 lbs.) of ferromanganese,
840 kilos (1848 lbs.) of burned lime.

The blowing engine gave 1.5 cbm. (53 cu. ft.) per stroke, which, after subtraction of 40% loss, becomes 0.91 cbm. (31.8 cu. ft.) per stroke.

ANALYSES.

Ingredients.		Pig Iron	1	2	3	4	5	Final Product
After.....		0	Disappearance of the spectral lines	100 strokes	100 strokes	30 strokes	Addition of Ferro Manganese	
After minutes....		0	14	15	16	17	17'30"	18
		%	%	%	%	%	%	%
In the Iron.	Carbon.....	3.00	0	0	0	0	0.10	0.10
	Silicon.....	0.75	trace	trace	trace	trace	trace	trace
	Manganese.	0.79	0.63	0.28	0.28	0.21	0.41	0.20
	Phosphorus	0.90	0.63	0.03	0.01	0.01	0.02	trace
	Sulphur.....	0.20	0.19	0.10	0.06	0.05	0.02	0.02
	Copper.....	0.07	0.08	0.08	0.08	0.08	0.08	0.08

III. RICHARDS'S INVESTIGATIONS.

Thomas-furnace at Middlesbrough.

---

(1) Op. cit. p. 413. The figures are shortened to two places.

ANALYSES.

	Ingredients	Pig Iron	1	2	3	4	5	6	7
	After minutes.....	0	3	6	9	12	14.5	16.5	16.6
		%	%	%	%	%	%	%	%
In the Iron.	Phosphorus.....	1.50	1.60	1.63	1.43	1.42	1.20	0.08	....
	Carbon.....	3.50	3.60	3.40	2.40	0.90	0.075	....	....
	Silicon.....	1.70	0.80	0.28	0.05	0.01	0	0	....
	Manganese	0.70	0.62	0.55	0.37	0.28	0.13	0.10	....
	Sulphur.....	0.05	0.05	0.05	0.05	0.05	0.05	0.05	....
In the Slag	Carbonic acid....	....	32.60	42.60	36.00	35.60	33.00	15.60	16.60
	Phosphoric acid...	....	0.60	0.15	1.60	2.61	5.66	15.06	16.03
	Iron.....	....	5.65	2.00	4.60	4.80	6.15	10.45	11.35

IV. STEAD'S INVESTIGATIONS.[1]

ANALYSES.

	After	0	5 mins.	10 mins.	15 mins.	18 mins.
		%	%	%	%	%
In the Iron	Carbon.....	3.50	3.55	2.35	0.07	trace
	Silicon.....	1.50	0.50	0.09	trace	....
	Manganese.....	0.71	0.56	0.27	0.12	trace
	Phosphorus.....	1.57	4.60	1.43	1.22	0.08
	Sulphur.....	0.16	0.14	0.13	0.12	0.10

The final slag contained :

		%
Protoxide of iron,	(FeO)	9.13
Alumina,	(Al_2O_3)	2.10
Protoxide of manganese,	(MnO)	4.32
Silica,	(SiO_2)	16.60
Lime,	(CaO)	47.08
Magnesia,	(MgO)	4.62
Sulphur,	(S)	0.12
Phosphoric acid,	(P_2O_5)	16.03

(1) Engineering and Mining Journal, 1883, p. 194.

The cinder thrown out (*Auswürfe*) had the following composition :

	%
Metallic iron,	70.30
Peroxide of iron,	14.50
Manganese,	0.11
Carbon,	1.01
Silicon,	0.63
Sand,	13.18
Phosphorus,	0.05
Sulphur,	0.06

In the accompanying diagram, Fig. 54, is set forth the

FIG. 54.

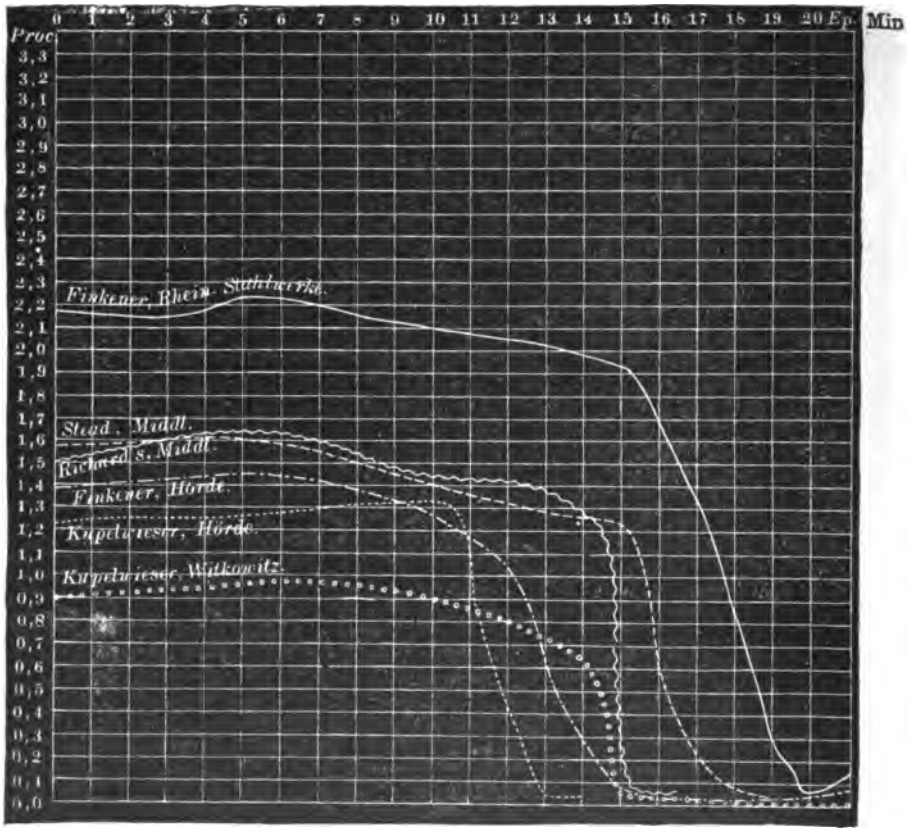

BEHAVIOR OF THE PHOSPHORUS.

behavior of the phosphorus in the foregoing different analyses. It is evident that the amount of the phosphorus has no perceptible effect upon its separation.

In the diagram Fig. 55, is shown the behavior of all of the

FIG. 55.

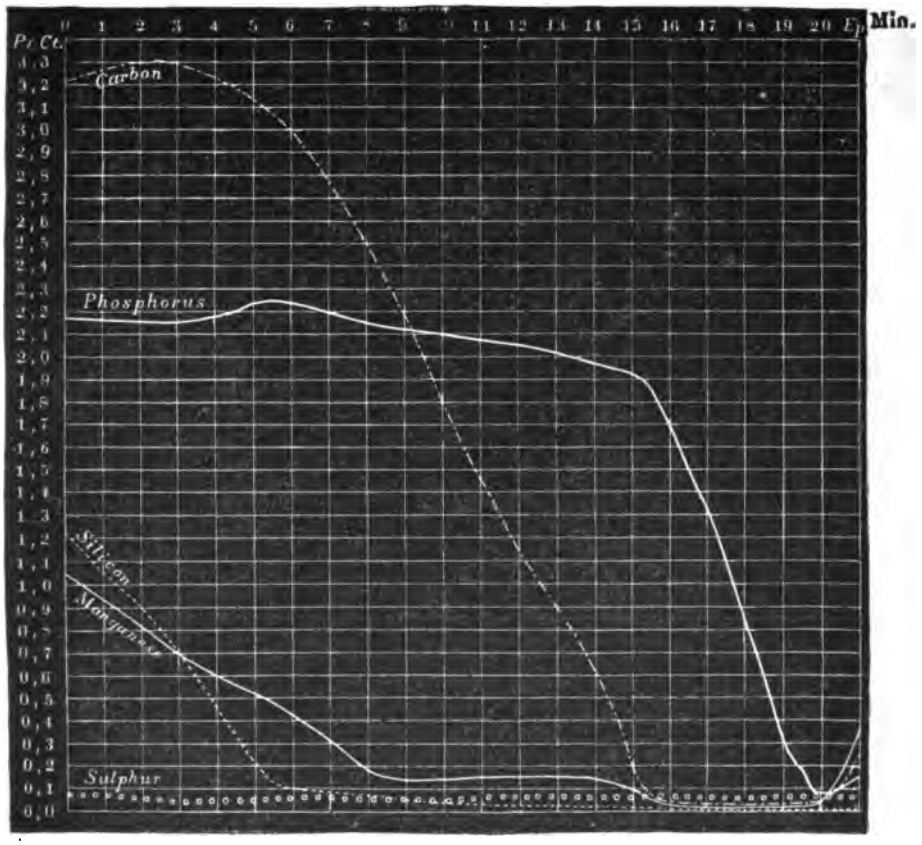

RHINE STEEL WORKS, HEAT NO. 125.

ingredients of pig iron, according to one of Finkener's analyses. Since this group of analyses chosen for graphical representation is the most complete of all, it is to be considered of especial importance in the discussion of the chemical phenomena in the basic process. In the two diagrams 'Ep,' signifies 'End-product.'

PHENOMENA OF OXIDATION.

We have to thank Professor Dr. Finkener, Chief of the Royal Bureau of Technical Research in Berlin, for the most detailed investigation of the phenomena of oxidation on which the basic Bessemer process rests. After the basic Bessemer process had been established at the Hermann Furnace in Hörde and at the Rhine Steel Works in Ruhrort, Professor Finkener and the author were charged by the Prussian Minister of Public Works with the duty of investigating on the spot and in person the economic and technical significance of the new process. This opportunity afforded the means of collecting from both these works numerous samples of the materials, and intermediate and final products, which are systematically arranged in the mining and metallurgical museum of the Royal School of Mines in Berlin.

These samples were analyzed in the laboratory of the Royal Bureau of Technical Research. The results were published during the year 1883, p. 28, *et seq.* of the "Communications from the Royal Bureau of Technical Research," and upon them are based the following discussions.

According to past experience a chemical compound must be considered as existing between two temperatures. Below a certain temperature on the one hand and above a certain temperature on the other a chemical combination of two elements or of two substances does not take place. These temperatures are, however, not identical with the decomposition or dissociation temperatures. For instance, carbon monoxide combines with oxygen to carbonic acid not under 250 (482° F.) nor above 2000° C. (3632° F.), but carbonic acid exists undecomposed below the minimum, and can also, under favorable circumstances, be preserved unchanged above the maximum, temperature here given.

Furthermore, the stability of a compound at a given temperature depends upon the chemical energy of the elements or substances associated with it.

The investigation of these two conditions in the basic Bessemer process gives as fundamental conceptions:

1st. The minimum temperature is always that of the fluid pig iron. The maximum temperature cannot exceed the dissociation temperature of the oxides of the elements contained in the pig iron.

The temperature at the beginning of the operation is generally greater, by a certain amount, than the smelting-temperature of pig iron. The temperature then increases with the removal of the elements in the pig, and always remains above the fusing point of the iron carbide, which finally loses almost all its carbon without solidifying.

2d. The oxygen carried in by the blast oxidizes those elements with which it first comes in contact, especially the iron, as this exists in great excess. Of the compounds formed, however, only those can remain undecomposed which are stable at the temperature reached.

Of the right which one has to draw from these analyses conclusions as to the phenomena in the converter, Finkener speaks as follows:

"The investigations carried out consist chiefly of analyses of the raw materials, the intermediate, and the final products of two heats, and in experiments for ascertaining the behavior of some products of the process to each other at a high temperature. Heat 125 at Ruhrort was run with a pig essentially richer in silicon, phosphorus, and manganese than heat 31 at Hörde. The analyzed samples of the pig and spiegel were taken from the runner, through which the melted iron flowed into the converter; those of the intermediate products were taken with a scoop from the converter at rest. The slag taken at the same time was freed as completely as possible from metallic iron, and only the fused part used for analysis."

"The method of sampling has the disadvantage that one cannot be sure that the composition of the samples of the iron and of the slag represents the average of the iron, and especially of the slag. At the beginning of the heat the slag-samples taken consisted chiefly of pieces of lime, with some hardened fragments of slag. The final slags of heats

30 and 31 (pages 138, 139) were freed from metallic iron, and are average samples of the entire quantity of slag; the increased content of silicon and phosphorus in heat 125 (page 136) caused a higher temperature in the converter, so that the process could be more regularly interrupted than in heat 31 (page 138), in which a repeated interruption for sampling was not permissible on account of the lower temperature."

It must not be overlooked that on account of the rapidity with which the Bessemer process is carried out, every sampling during the operation is injurious to the normal course, for it causes a diminution, temporary indeed, but still a diminution, of the temperature. It is generally the case, as is to be seen from Figure 55, that, as in the acid, so in the basic process, the amount of silicon and of manganese decreases first, then the carbon, then the phosphorus, and afterwards some remaining manganese.

That no such sharp separation of the oxidation-phenomena takes place as in laboratory experiments, is to be explained by the fact that the oxidation products have a lower specific gravity than the pig iron; they therefore rise, and withdraw themselves from the action of the pig in so far as they are not again mixed with it by the violent action set up within the converter. It is this action indeed that causes the oxide of iron formed to come in contact with the unoxidized elements of the pig and to give up its oxygen to them.

It now remains to examine the oxidizability of the different elements at the temperatures attained.

Iron.

Iron combines with the oxygen of the air, so long as it is in excess, to the very stable magnetic oxide. This oxide is (with a few exceptions, in which a direct reduction of other elements is occasioned by the oxygen of the air) to be regarded as the carrier of oxygen, and it imparts its oxygen either instantaneously or after awhile to all the elements stable at the temperature reached.

With silicon it gives silicic acid (SiO_2) most easily, and

forms with this at the same time a ferrous silicate. It then oxidizes the manganese. Both these reactions can go on at the same time, since silicon and manganese form a more stable silicate than silicon and iron. When the manganese is not sufficient for saturating the silica, silicate of iron is formed, and only then. On the contrary, when manganese is in excess, it remains in the iron, since free manganous-manganic oxide is reduced by iron carbide, when no more free silica is present. When all the silicon is removed, the magnetic oxide decomposes with the carbon; when the carbon is removed, the phosphorus comes into play, for iron carbide and phosphoric acid cannot exist together.

Silicon.

Of the elements present, silicon is the most easily oxidized, the sole product being silicic acid. So long as unoxidized silicon is present, no other oxide can exist, for not only are the oxides of iron but also those of manganese, of carbon and of phosphorus reduced by silicon.

Synthetical evidence on this point cannot be directly obtained, owing to the lack of proper apparatus for dealing with such high temperatures. Indirectly however it is capable of demonstration that the free oxides of iron and of manganese in association with iron carbide are not stable; the silicates, however, are. But even these transfer their oxygen to the silicon, until in the form of the lower oxides they become saturated with silicic acid [i. e. they become ferrous and manganous silicates, and are then stable.—Translator].

The analyses of the slags, in so far as they serve to fix the upper limit of the basicity, afford some information as to the composition of these silicates, for the unfused lime in the slag can very well impart basicity, but not acidity, to the silicates which separate out.[1] The basicity of the first slag-samples of heat 125 of the Rhine Steel Works was established by Finkener at 0.71, corresponding to the for-

(1) Op. cit., p. 31.

mula Si RO_3. As to the rest, it is to be considered that the first oxidation-product is Si Mn O_3, manganese bisilicate, if manganese be present in sufficient quantity, otherwise it is Si (Fe, Mn) O_3.

After all the silicon is oxidized, the silicate is transformed gradually into the unisilicate, Si Mn_2 O_4, or Si $(Mn, Fe)_2$ O_4. As already stated, silicon is so strong a reducing agent that no other oxidation-product can, at the time, exist along with it: not only are the oxides of iron and of manganese reduced by it, but also carbon monoxide and phosphoric acid. In accordance with this, so long as silicon-iron exists, no decarbonization can take place and no dephosphorization: one may even go further and say that through the agency of silicon the unisilicate of iron is decomposed and a bisilicate formed until no more free silicon is present. The formation of the unisilicate is always a secondary matter, depending upon the complete oxidation of the free silicon. It follows from all this that when silicon is found in the ingot iron, it must either have got into the metal again subsequently, or have been introduced at the end of the operation through the addition of siliceous substances. Finkener[1] states the indirect synthetical evidence for this as follows: A mixture of iron and calcined silicic acid (prepared in the wet way) heated in a glazed porcelain tube for half an hour to white heat suffered no more change than did a mixture of cast iron and silicic acid.

Manganese.

Next to silicon, manganese is the most easily oxidizable element in pig iron. Manganese, therefore, protects the iron from oxidation until it is itself completely oxidized. Since however it is not stable (like silicic acid) as protoxide or protosesquioxide with iron carbide, it can only be slagged off in proportion to the amount of silica available. An excess of it remains with the iron and is gradually removed with the carbon. The addition of manganese in the form of spiegel, or of ferromanganese, of course

(1) Op. cit., p. 33.

increases again the manganese content of the ingot iron at the close of the operation.

Carbon.

Carbon is oxidized to carbon monoxide and carbonic acid. So long as silicon is present, there is no decrease in the content of carbon, for carbon monoxide decomposes with iron silicide into iron silicate and iron carbide. The oxidation product of carbon, which appears after the removal of the silicon, is chiefly carbon monoxide, together with an amount of carbonic acid inversely proportional to the carbon-content of the iron ; the poorer this is in carbon the (relatively) more carbonic acid is formed. The amount of carbonic acid depends on the adjustment between the quantity of oxygen yielded by the carbonic acid to the iron, and the carbon of the carbon monoxide taken up by the iron.

Finkener[1] rightly supposes that this relation between carbon monoxide and carbonic acid will change according to the temperature, and according to the quantity of the iron, but that the carbonic acid can entirely disappear only when the iron is quite high in carbon. It is a difficult question to answer, whether the interference with the oxidation of other substances, even to disappearance of the carbon, is to be ascribed to carbon monoxide or to iron carbide. In this also, temperature must play an important part, otherwise the same results in the removal of phosphorus could not be obtained by the direct process, using low-carbon iron, and the Krupp process using high-carbon iron. In the temperature of the Bessemer process the carbon monoxide no longer seems to act reducingly, which may be explained by the fact that the dissociation temperature of carbonic acid is almost, if not altogether, reached.

As to this, Finkener says: "After the removal of the silicon, carbon monoxide appears, accompanied by a certain amount of carbonic acid, which increases with the

(1) Op. cit.

decrease of carbon in the iron. Manganous and ferrous phosphates are formed in perceptible, though not yet in considerable, quantities. These are for the most part reduced by the still existing iron carbide as is shown by the following synthetical researches."

This reduction ascribed to the mixture of the carbon monoxide and carbonic acid, is allowable only with the admission that the reducing power of the mixture increases more considerably with the elevation of the temperature than does the reducing power of iron carbide.

The low phosphorus-content of the metallic iron obtained from the different slags also militates against the admission of the reducing power of carbon monoxide on ferrous phosphate. The samples examined consisted in all cases only of some larger melted fragments. If the gas (carbon monoxide) reduced ferrous phosphate in the slag, there would have been found a kernel rich in phosphorus. If iron carbide is the reducing agent, the iron phosphide arising at once combines with iron, and there is no occasion for the formation of high-phosphorus iron.

Finkener carried on the following synthetical investigations.

1. Iron in a stream of carbonic acid at a dark red heat. The gas that was collected consisted of almost equal volumes of carbonic acid and carbon monoxide. The iron was changed into magnetic oxide.

2. Iron, in a nickel-boat, in a stream of carbonic acid at white heat. When the gas was passed through slowly it was changed into almost pure carbon monoxide; passed through rapidly there was yielded about ¾, by volume, of carbon monoxide, and ¼ of carbonic acid.

3. Iron oxide, in a nickel-boat, in a stream of carbon monoxide. At dark red heat there was yielded at first chiefly carbonic acid. This however soon changed (perhaps as the iron oxide was reduced to iron protoxide), and with increase of temperature to white heat there was yielded, both rapidly and slowly, perhaps ⅙, by volume, of carbonic acid. The iron oxide was changed into iron carbide with about 2% of carbon.

4. Iron, in a nickel-boat, in a stream of carbon monoxide. At white heat there was yielded but little carbonic acid, so that by absorption in caustic potash solution there was no evident decrease of volume. The iron had taken up 0.97% of carbon.

Phosphorus.

The phosphorus is oxidized to phosphoric acid, and there arises a phosphate of iron, consisting of 3 atoms of iron and one of phosphoric acid ($Fe_3 P_2 O_8$ or 3 FeO, $P_2 O_5$). Finkener has shown that a compound of phosphoric acid with less iron cannot separate out of the fluid iron, since it would be decomposed by the iron. He was led to this conclusion by the following synthetical investigations.

1. Iron phosphate ($Fe_3 P_2 O_8$ = 3 FeO, $P_2 O_5$) mixed with an equal weight of iron in an iron-boat in an atmosphere of nitrogen under an extra pressure of 30 mm. (1⅛ inches). The mixture was only strongly sintered, and contained no phosphoric acid.

2. A mixture of 1 part $Fe_2 P_2 O_7$, 1 part $Fe_3 P_2 O_8$ (= 2 FeO, $P_2 O_5$, and 3 FeO, $P_2 O_5$), and 2 parts iron, treated as No. 1. The mixture was completely melted, and consisted, on the under side, of iron phosphide.

3. A mixture of 1 part $Fe_2 P_2 O_7$, 3 parts $Fe_3 P_2 O_8$ (= 2 FeO, $P_2 O_5$, and 3 FeO, $P_2 O_5$), and 4 parts iron, treated as No 1. The mixture was strongly sintered; by treating with diluted sulphuric acid it evolved only a little hydrogen phosphide.

4. A mixture of one part $Fe_2 P_2 O_7$, 9 parts $Fe_3 P_2 O_8$ (= 2 FeO, $P_2 O_5$ and 3 FeO, $P_2 O_5$), and 10 parts iron, treated as No. 1. Result as in experiment No. 3.

This oxidation of the phosphorus can take place neither before the decomposition of the iron silicide, which in contact with the phosphate is changed into silicate and phosphide, nor before the decomposition of the iron carbide, which is changed into carbon monoxide, and phosphide. The former phenomenon is altogether excluded, since the silicate remains in the mass; the second is in a small way

allowable since the carbon monoxide escapes as a gas. As to the influence of the carbide in contrast to carbon monoxide, which as such does not appear to cause the reduction of phosphorus at a high temperature, the following synthetical comparisons, by Finkener, give the particulars.

1. Tribasic iron phosphate (ferrous phosphate) in a stream of carbon monoxide. Even at white heat there was no perceptible action.

2. A mixture of tribasic iron phosphate (ferrous phosphate), and pig iron with 3.8% of carbon, in such proportions that the carbon of the pig was sufficient to change all the oxygen of the ferrous phosphate into carbon monoxide: this mixture in a stream of nitrogen. Not until a bright red heat, did the gas yielded contain carbon monoxide. When the reaction was completed at white heat the contents of the nickel-boat had been reduced to iron phosphide, and melted with it into little balls.

3. A mixture of iron oxide with tribasic iron phosphate in such proportions that by complete reduction there would result an iron phosphide with 3% of phosphorus: this mixture in a stream of carbon monoxide. At a dark red heat and with a slow stream of carbon monoxide the gas yielded consisted at first of almost pure carbonic acid, at white heat it contained about ⅓, by volume, of carbonic acid. The contents of the boat were completely reduced, and partly alloyed with it.

Only when the carbon is consumed, and evolved as carbon monoxide or carbonic acid, can the phosphorus slag off, for iron phosphate with decarbonized iron is stable.

The increase of the phosphorus-content after the addition of the spiegel or the ferromanganese, can arise from the newly added iron carbide, which reduces, from the slag, iron phosphate to iron phosphide.

This increase can also arise from the manganese which abstracts the oxygen of the iron phosphate.[1]

---

(1) Ehrenwerth, *Stud. über d. Thomas-Gilchrist Process*, 1881, p. 189.

Sulphur.

The amount of sulphur is but little or not at all diminished by the basic process. Professor Finkener was the first to call attention to this disadvantage. Iron sulphide in contact with the oxides of iron is stable. Other sulphur compounds, when they are formed, are decomposed by iron.

Finkener carried on the following synthetical investigations.[1]

1. Iron in an atmosphere of sulphurous acid. The iron was fused, and there was formed an oxide of iron, and iron sulphide.

2. A mixture of iron sulphide (FeS), protoxide of iron, and iron, in a tube exhausted of air. The mixture was completely melted, the platinum boat eaten through and the tube fused.

3. Iron and sulphate of lime in an exhausted tube. The mass was melted, and there was formed oxide and sulphide.

If, in spite of what has been said, there is a diminution of the sulphur-content, as the foregoing analyses show, it is to be ascribed to the action of the slag. It is well known that in the acid Bessemer process sulphur is evolved in considerable quantity as sulphurous acid, because iron sulphide, silica, and carbon change into carbon-silicon-iron and sulphurous acid.[2] In this way from 92.8% to 97.5% of the sulphur can be removed. In the basic Bessemer process a similar occurrence can take place only at the beginning of the refining period, when the silicon of the iron is being slagged off, or later through a local action of the slag on the iron sulphide and a rapid, incidental removal of the sulphurous acid away from the reducing action of the metallic iron.[3]

This last phenomenon seems to take place more completely in an over-blow, since, when the blow is continued

(1) *Mittheilungen*, etc., loc. cit.

(2) *Abthl.* I., p. 48.

(3) *Abthl.* I., p. 44.

past the removal of the phosphorus, sulphur also can be removed, apparently through the action of the slag, at that time rich in oxide of iron. At Creusot, they diminish, by overblowing, the sulphur in the pig from 0.2% to 0.03%.[1]

Over-blow in contrast to after-blow means an operation connected with considerable oxidation of the iron. In the acid Bessemer process the blow after complete removal of the carbon is termed the "over-blow."

Finally, a removal of sulphur takes place by the addition of manganese at the close of the process, the amount removed increasing with the amount of manganese added, and is therefore greater with ferromanganese than with spiegel.[2]

If the action of sulphur in the blast furnace can be compared to its action in the acid and basic Bessemer process, it follows that a sulphur separation can take place with calcium and manganese, because the oxidizing effect of the oxygen fails: in the acid Bessemer process the oxidizing effect of the oxygen adds to that of the free silica—while in the basic Bessemer process these two conditions fail, and therefore a low sulphur-content conditions a favorable result.

Influence of the Basic Fluxes.

The influence of the lime flux has not yet been discussed, and a true representation of the phenomena of the process can indeed be given without considering it. If the dolomite lining is necessary to obviate the action of the free silica, the lime fluxes only serve the purpose of hindering the action of the silica formed from the silicon of the pig iron. The amount of lime added is determined not by the phosphorus, but by the silicon-content of the pig iron.[3] In practice, however, it is best to employ a considerable excess of lime.

---

(1) Delafond, *Glückauf*, 1883, No. 15.

(2) If Rollet's supposition is right, viz., that the removal of the sulphur increases with the fluidity of the slag, an addition of fluorspar, soda, or potash might be beneficial.

(3) See p. 104.

According to Ehrenwerth,[1] the formation of the earthy phosphates takes place only where the slag is already saturated with earthy-bases to a subsilicate, and excess of lime is present. It is, however, doubtless the case that at first phosphate of iron is always formed; but neither iron nor calcium phosphate can be formed so long as the silicon is not oxidized, for the phosphorus is reduced not only from the calcium, but also from the iron-phosphate.[2] The phenomena in the decarbonization are not essentially different. It is only in the after-blow that iron and calcium phosphates can exist together.

The formation of calcium phosphate from iron phosphate is not to be considered as occurring suddenly. It is rather to be held that the unfused lime forms first a fusible silicate with the silicic acid, and then enters into combination with the phosphoric acid wherever it comes in direct contact with the fused phosphate of iron. In this reaction, the iron displaced by the stronger base (lime) cannot exist as protoxide, but, with reduction of a corresponding portion of iron, changes into the magnetic oxide. So long as iron carbide is present, the peroxide of iron, which is formed, oxidizes the carbon and is itself reduced. Owing to the infusibility of the lime it is not strange that all these phenomena should take place more or less incompletely.

In the molten slag are found silica, phosphoric acid, iron and manganese protoxides, lime, and magnesia. The question of chemical combinations in such a molten substance is different from that pertaining to a substance fluid at ordinary temperatures, as for instance, one in an aqueous solution; it is not always possible to say in what shape these substances are present, nor whether they exist in the molten slag in the same form as in the hardened slag.

The question as to the form in which the phosphoric acid exists in the hardened slag is of no importance for the basic Bessemer process, but it is important for the further valuation of the slag. The consideration of this matter

(1) *Studien*, 1881, p. 184.

(2) *Abthl* I., p. 91, *et seq.*

will be deferred to the Eighth Chapter, but it may be remarked here that the greatest part of the phosphoric acid seems to be combined with lime. It is on this account that the amount of iron in the slags is small, if the after-blow does not become an over-blow.

SECTION II.—PHYSICAL PHENOMENA.

The physical phenomena are essentially the same as those of the acid process, with the exceptions that the phosphorus contributes to the generation of heat, and the great quantity of lime to the absorption of it.

The generally accepted calories for the substances we are dealing with are as follows,[1] per kilo.

		Calories.
Carbon to	Carbonic acid,	8080
	Carbon monoxide,	2473
Oxygen to	Carbonic acid,	3030
	Carbon monoxide,	1855
Iron to	Protoxide,	1352
	Magnetic oxide,	1648
	Peroxide,	1746
Oxygen to	Protoxide of iron,	4732
	Magnetic oxide of iron,	4326
	Peroxide of iron,	4190
Manganese to	Protoxide,	2000
	Peroxide,	2410
Oxygen to	Protoxide of manganese,	6875
	Peroxide of manganese,	4110
Silicon to silica,		7830
Oxygen to silica,		6850
Phosphorus to phosphoric acid,		5760
Oxygen to phosphoric acid,		4500

By the use of these figures the evolution of heat in the basic process can be calculated quite as exactly as in the acid process, if to the non-gaseous products of combustion (whose heat is also of advantage to the bath) be added the phosphoric acid (P_2O_5) formed from the phosphorus.

(1) Ledebur, *Eisenhüttenkunde, Abthl.* I., p. 21.

This part of the subject is discussed in the author's work, "The Manufacture of Malleable Iron," p. 432, *et seq.*

Ehrenwerth[1] has given these calculations in detail for the different grades of pig iron, i. e. for the different contents of silicon, manganese, and phosphorus. It is, however, to be remarked that the author has used figures differing from those of Ehrenwerth for the absolute heat-effect of the iron and manganese. Ehrenwerth's figures are as follows:[2]

1 part by weight of	Requires Oxygen, parts.	Product		Calories		
		Compound.	Weight.	Given out.	Carried off.	Remaining in the bath.
Silicon	1.143	SiO_2	2.143	7830	1307	6523
Phosphorus	1.250	P_2O_5	2.250	5766	1430	4336
Iron	1.286	FeO	2.286	1257	327	930
Manganese	0.210	MnO	1.210	1280	333	947
Carbon	1.333	CO	2.333	2473	2333	140
Carbon	2.667	CO_2	3.667	8080	4161	3919
1 Silicon, 4 Iron	2.286	Fe_2SiO_4	7.286	12858	2615	10243
1 Phosphorus, 1.806 Iron	1.766	$Fe_2P_2O_7$	4.572	8036	2021	6015

The last column shows the amount of heat, which, by reduction, again becomes available for the fluid mass.

The same result can be obtained by calculations based on the final slag. Slag No. 10 (p. 137) of the Rhine Steel Works will serve as illustration. In this slag are 47.87% of lime to 6.75% of magnesia, which [ratio] arises partly from the fluxes and partly from the lining, for in the

(1) *Studien über den Thomas-Gilchrist Process*, 1881.

(2) Op. cit, p. 64.

Note by the Translators. Ehrenwerth's book can be highly recommended to those who wish to pursue this interesting and important subject further. Our space does not admit of more than a brief reference to it.

lime-flux are 89.05% of lime to 3.05% of magnesia, and in the lining 54.37% of lime to 33.01% of magnesia. It is therefore found that 26% of the total lime and magnesia come from the lining, and 74% from the flux.

Besides lime and magnesia, the final slag contains, of the originally oxidized products (see analyses of basic stone from Hörde and of calcined lime, p. 138), as follows:

	Silica.	Iron oxide.	Protoxide of manganese.	Phosphorus.
	%	%	%	%
From the lining	1.6	0.9	0.3	0.03
From the flux	0.6	0.4	—	0.008
Total	2.2	1.3	0.3	0.038

In 100 parts of slag are contained the following substances derived from the pig iron (Anal. 10, p. 137) by combustion:

12.77 − 2.2 = 10.57 silica from 4.94 silicon.
16.92 − 0.04 = 16.88 phosphoric acid from 7.37 phosphorus.
2.87 − 1.3 = 1.57 iron oxide from 1.10 iron.
4.80 − 0.3 = 4.50 protoxide of manganese from 3.49 manganese.
and 5.94 protoxide of iron from 4.62 iron.

These represent 96,333 calories, for 38,680 + 42,451 + 1,976 + 6,976 + 6,980 + 6,246 = 96,333 (s).

For 5,597 kilos (6.156 tons) of ingot iron produced there were obtained 975 kilos (1.07 tons) of slag, developing $\frac{975s}{100} = 93{,}925$ calories.

In the pig there were 3.21% of carbon, of

which 3% burned to carbon monoxide with	7419	calories,
and 0.21% burned to carbonic acid with	1697	calories,
giving a total of	9116	calories

per 100 kilos (0.11 ton) of pig.

The 6,000 kilos (6.6 tons) of pig charged developed 546,960 calories: the carbon in the 350 kilos (0.385 ton) of spiegel and ferromanganese, less that contained in the

final product, burned to carbonic acid. In this material (the spiegel and ferromanganese) were 5.18% of carbon; the 350 kilos (770 lbs.) served to manufacture 5,597 kilos (6.15 tons) of ingots with 0.026% of carbon. There were consumed $\frac{5.18 \times 350}{100} = 18.13$ less $\frac{0.26 \times 5597}{100} = 14.55$ kilos (32 lbs.) that is, 3.58 kilos (7.87 lbs.) of carbon contained in the spiegel and ferromanganese, burned to carbonic acid with development of 28926 calories.

The total number of calories developed from the pig, the spiegel, and the ferromanganese is thus 546960 + 28926 = 575886.

If one regards the after-blow as not contributing to the utilization of the heat, the calories derived from the spiegel and ferromanganese are not taken into account, and we have only the 546960 calories from the pig. The 6,000 kilos (6.6 tons) of pig represent 975 kilos (2145 lbs.) of slag; of these calories, therefore, 561 for every unit of weight of slag come from the combustion of the carbon, while 963 $(\frac{s}{100})$ come from the oxidation of the liquid substances.

To the amount of heat derived from the process is to be added that of the pig, and of the blast. If from the sum of the heat derived from these three sources be subtracted the heat contained in the final products, we have the loss of heat. This loss is due principally to the gases evolved, next, to the cinder (*Auswürfe*) thrown out, and least of all to the conduction and radiation of heat from the walls of the converter.

Let W represent the heat of combustion of the silicon, manganese, iron, phosphorus and carbon, obtained by one of the before-described methods: and W_1 the heat added by the pig, obtained from the weight, the heat of fusion, the specific heat, and the excess of temperature.[1]

The heat of fusion of the pig is on the average 46 calories, the specific heat before fusion 0.16, and after fusion 0. 21. The fusion-point of the pig iron is 1200° C. (2192° F.).

---

(1) *Abthl.* III., pp. 438 and 439, *Anmerkung.*

Let t° = the temperature of the pig brought into the converter from the cupola. We have then:

$W_1 = 46 + 1200 \times 0.16 + 0.21 \times (t^\circ - 1200^\circ)$.

From this Ehrenwerth[1] calculates the amount of heat for 100 kilos (220 lbs.) of pig with a temperature of 1300° C. as 25900 calories, and with a temperature of 1400° C. as 28000 calories. It follows then that an increase of 100° C. (180° F.) of temperature in the pig represents the considerable number of 2100 calories.

The temperature of the blast is generally about 120° C. (254° F.). If s_1 = specific heat (0.2377), we have 28.52 calories for 1 kilo (2.2 lbs.) of blast, from the formula $W_2 = 1 \times s_1 \times 120$.

The amount of blast can either be calculated from the oxygen used for the oxidation, taking into consideration the nitrogen in the air, or it can be found from the duty of the blowing engine; 4.35 parts by weight of air correspond to 1 part by weight of oxygen.

Ehrenwerth gives the following formula for calculating the heat brought in by the blast:[2]

$L = 4.35\ (2.286\ s + 1.766\ p + 1.333\ c)$, where s = amount of silicon, p = amount of phosphorus, which combines as phosphoric acid (P_2O_5) with two atoms of protoxide of iron (2 FeO), and c = the carbon burned to carbon monoxide. The constants employed signify the amounts of oxygen necessary for the unit of weight of each element (see p. 157). We have then $W_1 + W_2 + W_3 = W$ = the amount of heat brought in by the blast and the pig and caused by the oxidation.

The calculation of the heat carried off is as follows:

Heat of fusion of the ingot iron = 40 calories.

Heat of fusion of the final slag = 50 calories.

Specific heat of the ingot iron to 1000° C. (1832° F.) = 0.171; per 100° C. = 0.007, specific heat of the slag = 0.30.[3] The general formula for the specific heat of the

(1) Op. cit., p. 68.

(2) Op. cit., p. 68.

(3) Ehrenwerth takes this number (though still too high) on account of the unfused lime, in place of the figures 0.33, obtained from blast-furnace slags.

metal is[1]: $\sigma = 0.171 + \frac{T - 1000}{10} \times 0.007$, and the formula for the heat contained in the ingot iron and slag is $W = 50\ S_1 + 40\ M_1 + (0.30\ S_1 + \{0.71 + [T - 1000]\ 0.00007\}\ M)\ T$, where M_1 = amount of metal, and S_1 = amount of slag. From this, however, is to be deducted the heat contained in the lime before its introduction into the converter. The specific heat of lime can be taken at 0.2, and its average temperature at 800° C. (1472° F.). It brings with it then 160 calories per unit of weight.

Finally, it is to be remarked that the converter gases have a temperature of about 1400° C. (2552° F.), and the specific heat = 0.245.

When a low-silicon pig is used there is now no further difficulty in carrying on the process and obtaining sufficiently fluid final products.

This is based on the beneficial effect of the combustion of the phosphorus, in spite of the great amount of heat necessary in the basic process for fusing the slag. This combustion goes on at the most favorable moment, when the fusing point of the iron and manganese has attained its maximum. In the acid process an elevation of temperature at this time can be attained only by combustion of the iron.

There is, however, no excess of heat over and above that necessary for securing a favorable result. This shows the necessity of heating the converter and the lime beforehand, and of taking the samples as quickly as possible. On this account Harmet's suggestion to use two converters, an acid and a basic, is not to be recommended, because in transferring from one to the other the material would be cooled too much.

---

(1) Op. cit., p. 69.

CHAPTER VII.

GENERAL ARRANGEMENT OF BASIC BESSEMER WORKS.

[The figures in brackets refer to the Notes at the end of the volume.]

THE steel works, which first introduced the basic process were originally fitted up for the acid process and used simply the old arrangements for the new process, but it very soon proved that to make the same output, two basic converters were insufficient, and that the combination of the converting department with the casting house was troublesome. Furthermore a great many of the German works did not use the changeable bottom in the early days of the basic process, but this arrangement is indispensable. The changeable bottom after the American method began slowly to come into general use about 1876.[1] For the above reasons Holley, in 1880, proposed the following new arrangement, shown in Figs. 56 and 57. The converters, which can be lifted from their bearings are carried to a separate room at the back of the housing. There they are lined and kept. The repair shop, C, for the bottoms and the necessary furnaces, D, are situated near it. The furnaces are arranged in a circle. Only the spiegel furnaces, E, are kept in the converting department. The pig iron melting furnaces are put in a separate building. The liquid metal is conveyed to the converting house in a ladle, F, where it is lifted up [at H], and brought on an elevated track near enough to the converters so that the iron can be poured out into a short runner or direct into the converter. Holley hoped by this arrangement to reduce the cost of labor and at the same time give a better ventilation to the whole plant than was possible with the old plants. The bottom of the casting pit is on the floor level, which has the advantage of easy transportation of the slag.

(1) Compare *Zeitschrift f. Berg- Hütten- und Salinenwesen*, 1876: *Eisenhüttenwesen in Nordamerika*: and *Abthl.* III., p. 906.

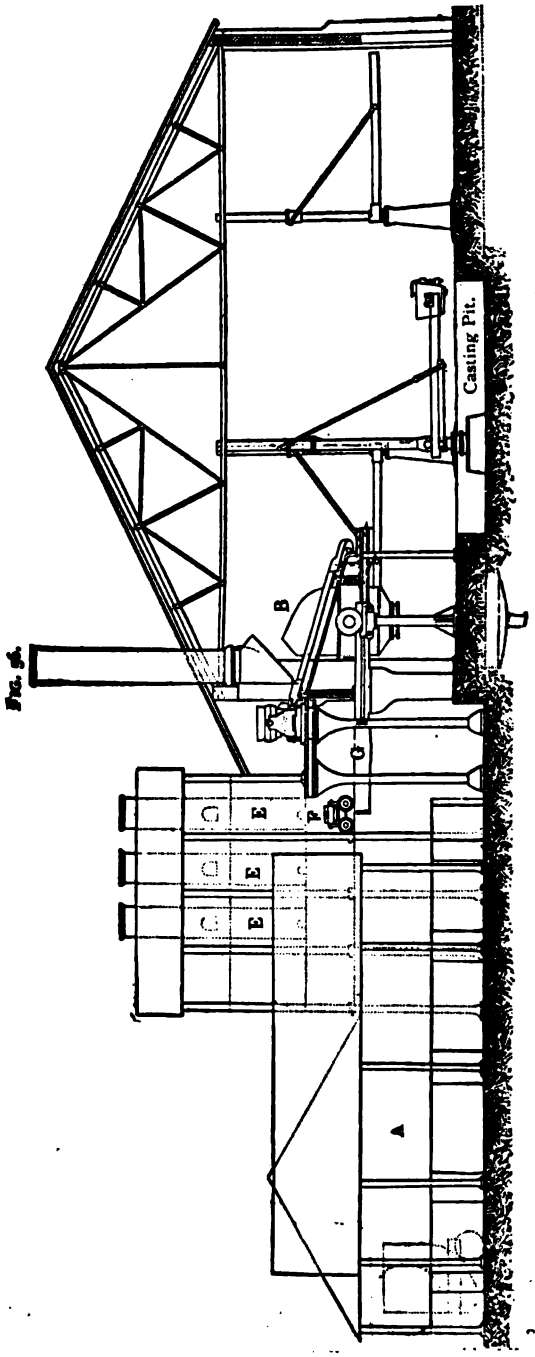

Fig. 48.

HOLLEY'S ARRANGEMENT OF A BASIC BESSEMER PLANT.—(VERTICAL SECTION.)

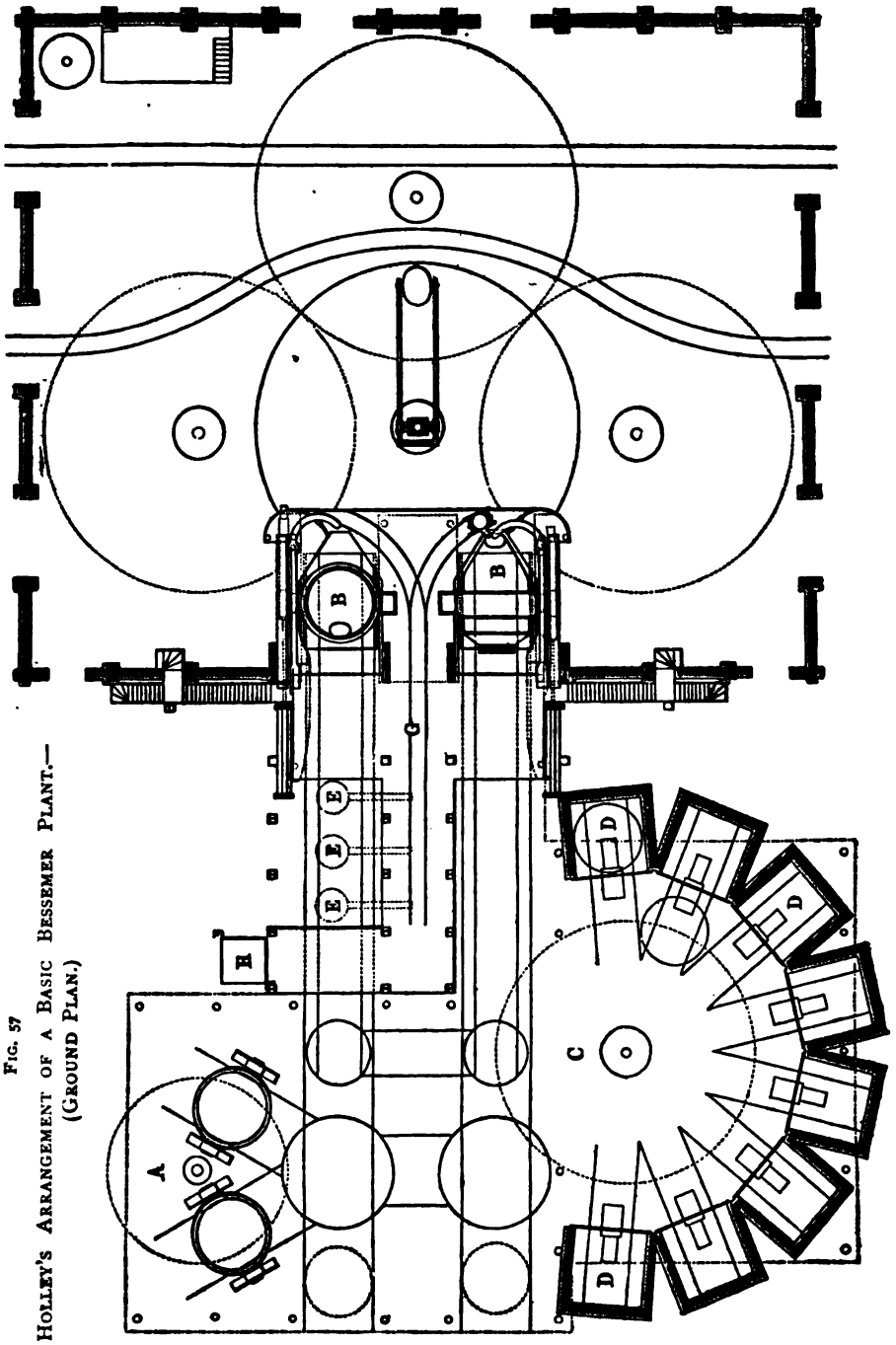

FIG. 57

HOLLEY'S ARRANGEMENT OF A BASIC BESSEMER PLANT.—(GROUND PLAN.)

Another arrangement, different from the usual plans, is carried out at Erimus near Middlesbrough, where the plant originally put up for rotating puddle furnaces was rebuilt entirely for the basic process. Figs. 58 and 59 show the section and the ground plan.[1]

FIG. 58.

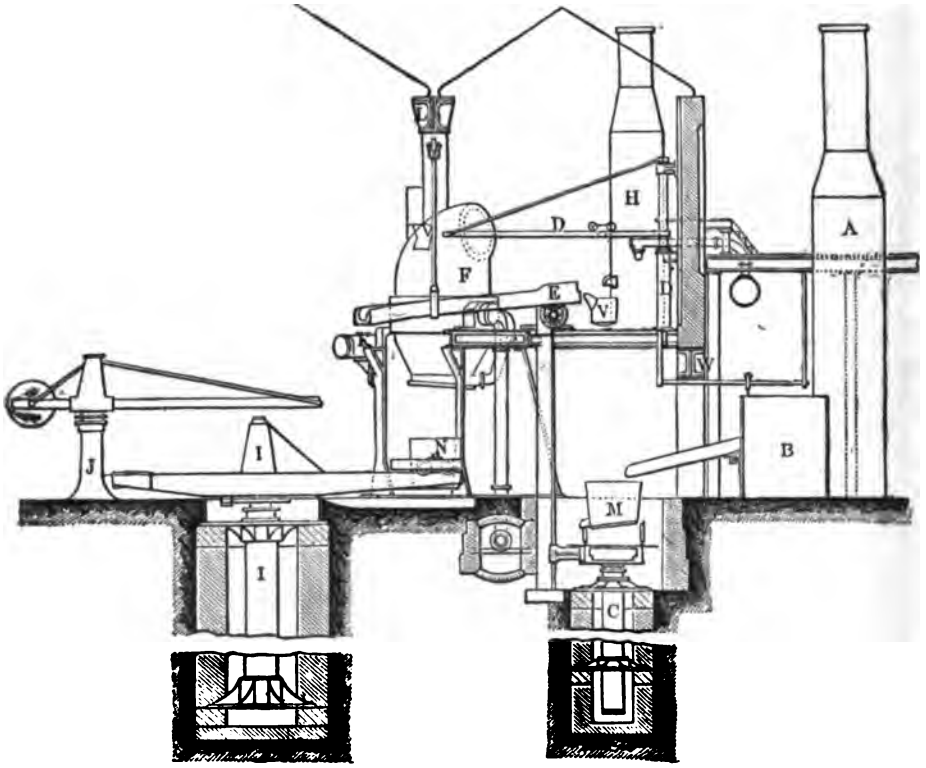

ERIMUS WORKS—(VERTICAL SECTION).

The pig iron cupolas, A, have a collecting basin, B, from which the pig iron is tapped into the ladle, M. The ladle is lifted up by an hydraulic crane high enough for the liquid iron to be poured through the runners, E, to the converters. The runners are suspended in front from the roof, and rest on the back end on wheels to allow an easy pour-

(1) C. J. Copeland, *Stahl und Eisen*, 1882, p. 57 and Table 2.

ing from the ladle. The spiegel cupolas, H, are located on the floor of the converter platform but the spiegel tapped into the ladle, V, has to be lifted high enough to be emp-

FIG. 59.

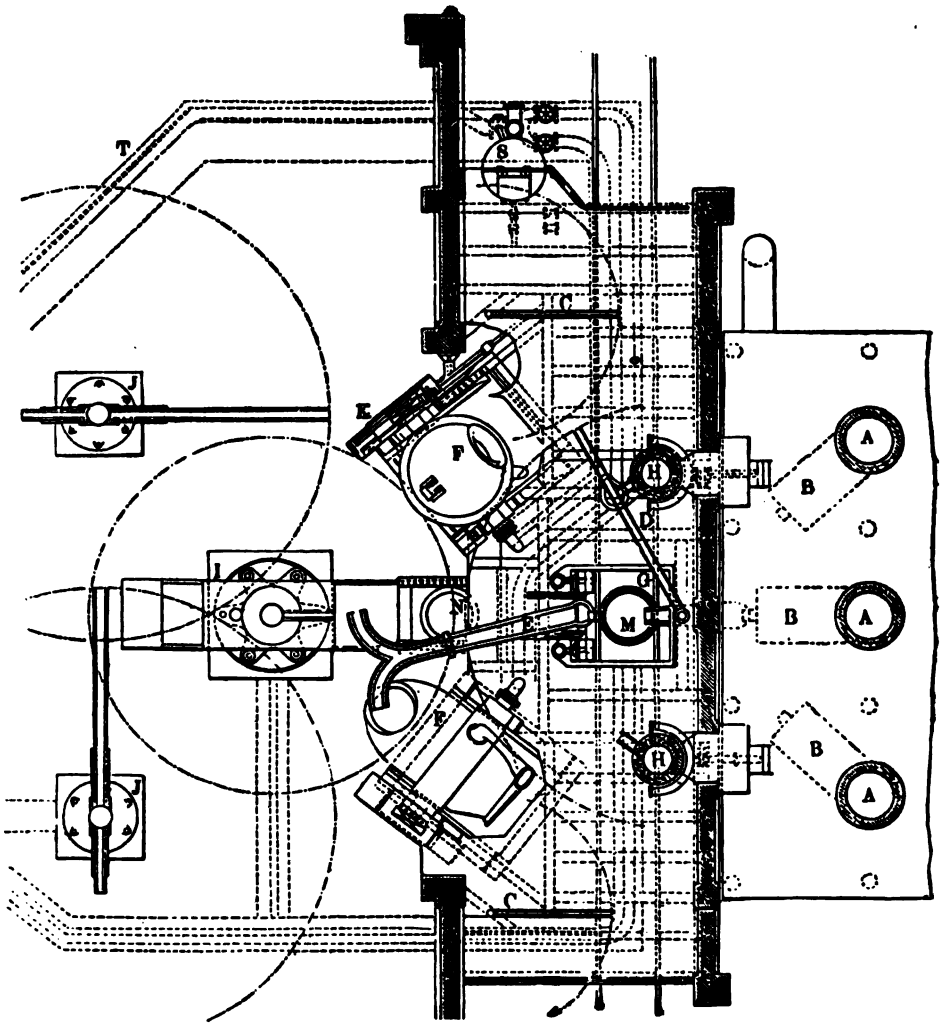

ERIMUS WORKS—(GROUND PLAN).

tied into the runners, D. This lift is made with an hydraulic crane. The converter, F, has 6 tons capacity, 8 ft.

diameter of the shell, and ⅞-inch shell plates. The total height is 14 ft. 10 in. The distance from the trunnions to the converter bottom is 6 ft. 2 in., and the same shaped con-

FIG. 60.

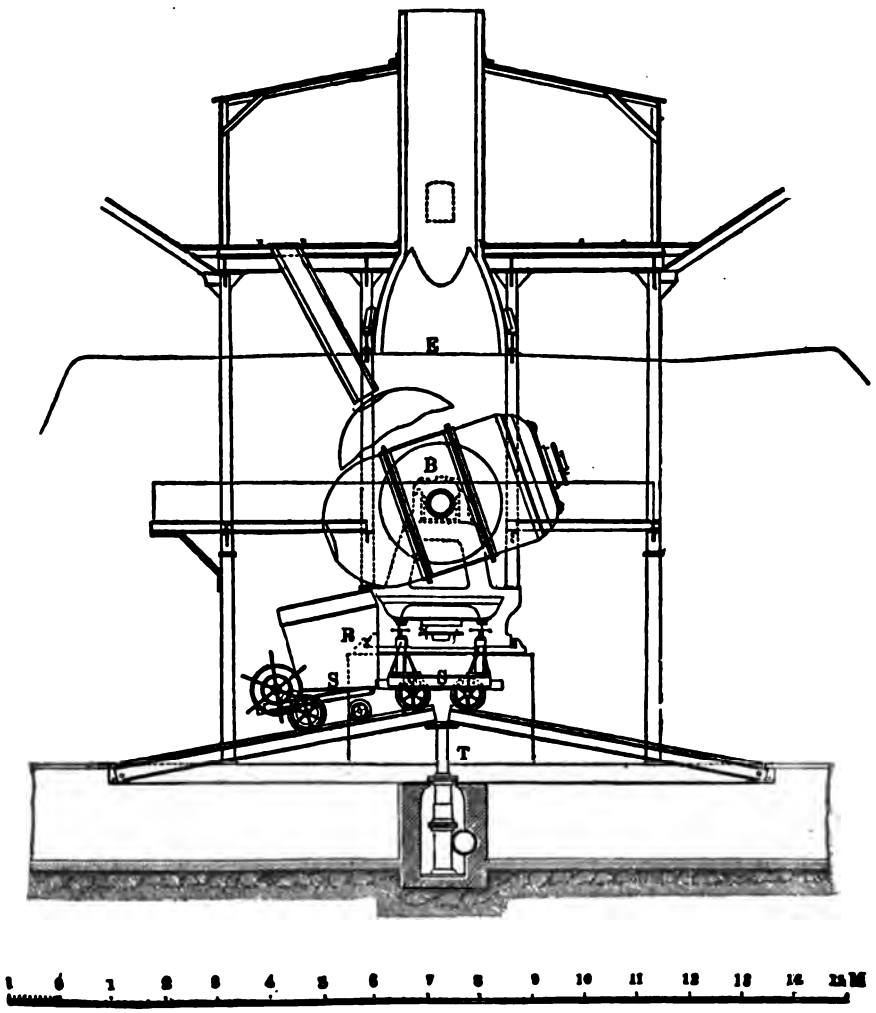

WITKOWITZ—VERTICAL SECTION.

verter as already shown in Fig. 10, p. 73, is used. The trunnions are 15 ft. from the floor. The apparatus for turning

the converter is a peculiar one. It consists of a hollow piston rod, K, through which the water flows in the movable cylinder, which has a rack attached to it. The casting crane, I, with plunger 24 in. in diameter and lift of 18 ft. 8 in. has a swing of 16 ft. 8 in. to the centre of the ladle. As it might be necessary to use the divided process [p. 132], a transferring of the metal from one converter to the other was had in view. The ingot cranes J, are of 5 tons capacity with 9⅞″ and 15¾″ plungers, a lift of 7 ft. 4⅝ in. and a swing of 17 ft. 9 in. The accumulator has a cylinder 24 in. diameter, 19 ft. 8¼ in. stroke and a pressure of 600 lbs. per square inch. The blowing engine has two steam cylinders of 42″ and 78″ diameter, a wind cylinder of diameter of 54″, and a 50-inch stroke. Witkowitz has a Bessemer plant of two converters with a peculiar arrangement. This is shown in Figs 60 and 61, and depends in the first place on the construction of the converters [described already on p. 72, Fig. 9] for pouring on both sides. The two converters, B, are arranged on both sides of the common cupola, E. The tilting of the converter is performed with a double acting steam-engine, W. Each converter has a long, straight casting pit, G, on each side. The ladle, R, mounted on a carriage, S, is brought under the converter on an inclined track already described on p. 77. This enables the ladle to follow the motion of the converter during the pouring. In the same way the slag is collected in other cars which are brought direct to the blast furnaces. The plant is arranged for two symmetrical groups, but only one is shown in the drawing. [20] The same principle, to carry the ladle containing the steel to a straight casting pit situated at a right angle to the axis of the converter trunnions, is carried out at Neunkirchen. But here a swinging crane is arranged between the converter and the casting pit. This enables one crane to serve both converters and requires only one pit situated in the middle between both converters. A similar arrangement, but with the casting pit farther away and with a locomotive ladle crane, was chosen at Bochum. Hörde and Peine have entirely abandoned the old system and chosen a locomotive ladle crane

for a group of converters in a row. The locomotive ladle crane runs in front of the converters on a track and serves all of them, and after being filled with steel is taken to a separate casting house. The arrangement at Peine, which, according to the opinion of the author, answers all demands completely, is shown in the figures. Fig. 62, Plate II., shows the general arrangement of the plant. The plant is built close to the old puddling works. It includes the converting

FIG. 61.

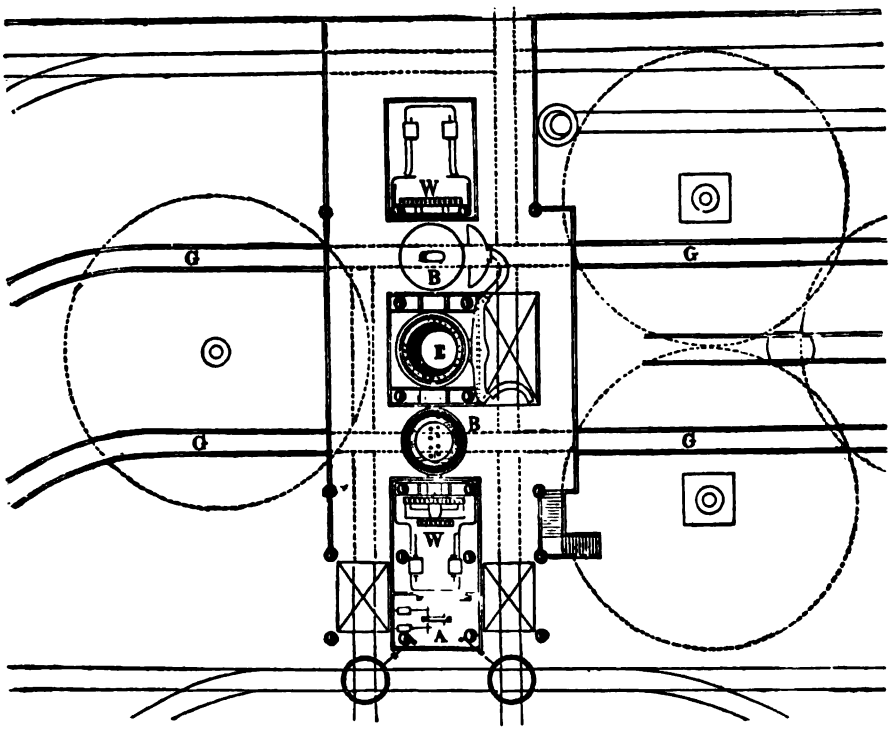

WITKOWITZ,—GROUND PLAN.

department of six converters with melting house built right on the back of it. The casting pit is in a separate building and adjoining the converting department. Behind the melting house are the lime kilns; their construction is shown on page 99. The engine room and boiler house is in front of the converting department. The basic-brick

works are connected to the cupola house by the drying room for basic materials. The rolling mill is in the same line with the casting house but separated by a pretty wide space. The ground plan and longitudinal section of the Bessemer

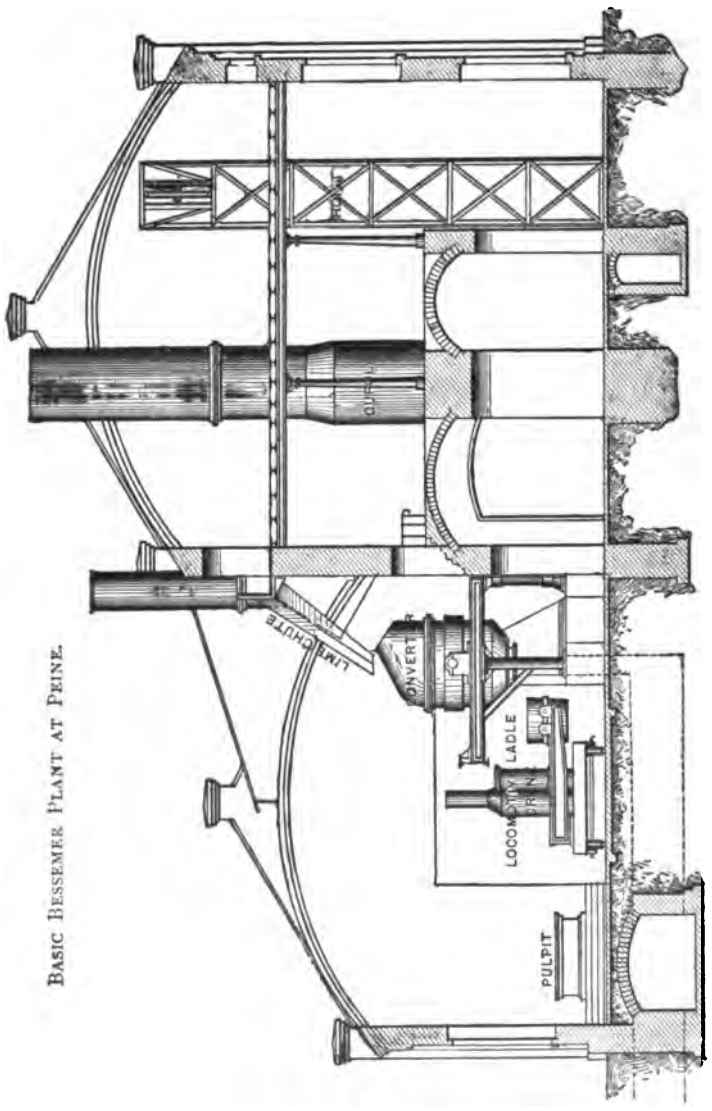

FIG. 65.

BASIC BESSEMER PLANT AT PEINE.

Cross Section through the Converting Department and Cupola House.

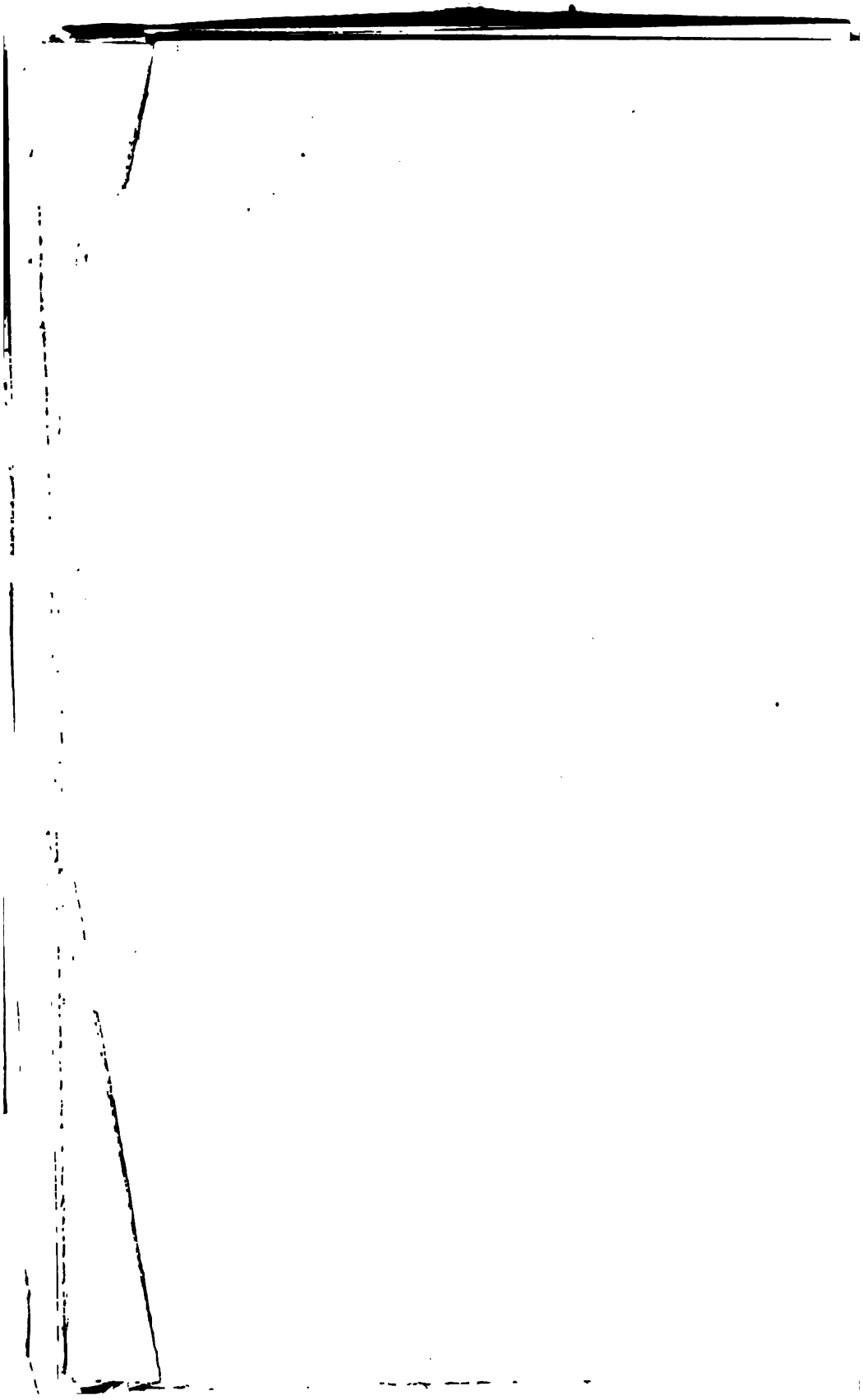

works are shown on a larger scale in Figs. 63 and 64, Plate III. Fig. 65 shows a cross section. The six converters are arranged in three pairs. Only the three converters shown in the section were at first built, afterwards a fourth converter which belongs to the second group was added, and later on the whole three groups of converters will be completed. Accordingly only three of the six cupolas were constructed.[1]

The general dimensions are as follows: The converting department for six converters is 170 feet by 52½ feet. The converters are 23 feet from centre to centre. The trunnion centre is 18 feet above the floor level. Behind the converting department is the cupola house, which is 143 feet long and 54 feet wide. The three cupolas are 32 feet 8 inches from the centre of the converters and 21 feet 3 inches above floor level. The charging floor from which the lime is brought into the converters through shutes is 38 feet high. The locomotive ladle-crane runs on a track 15 feet from the converter axis and conveys the steel to a casting house 170 feet long by 50 feet wide.

The new plant at Königshütte in Upper Silesia is on the same plan. The one at Friedenshütte differs slightly. The steel is poured out from the converters on the opposite side, as at Peine. At Rhymney the ladle brought from the converting department is received by a central crane located in a circular pit. These arrangements have been already discussed in Chapter V. [27] All the plants which use the basic Bessemer process have comparatively large converters. The small ones introduced at first in Sweden for the acid process, and which are still in use with success there for small charges down to 375 lbs., have not yet been tried in the basic process.[2] The conditions for their successful use would be a particularly careful heating of the converters before charging the iron and a strongly preheated lime.

(1) Compare *Die Iselder Hütte von 1858 bis auf die neueste Zeit.* Hanover, 1884.

(2) Descriptions are found in the *Oesterreichische Zeitschrift für Berg- und Hüttenwesen*, 1883, p. 99, and 1884, p. 5; also in the *Zeitschrift des Vereins deutscher Ingenieure*, 1884, p. 415.

CHAPTER VIII.

UTILIZATION OF BASIC BESSEMER SLAG.

NEARLY all of the phosphorus in the pig iron passes into the slag, and is there contained in the form of phosphoric acid. A portion of the original phosphorus disappears, partly, perhaps, by volatilization, but chiefly in the form of cinders. The cinders at the close of the process likewise contain the phosphorus as calcium phosphate, but at an earlier stage of the process the phosphorus exists as phosphide of iron.[1]

Kupelwieser[2] estimates the loss of phosphorus at 40.2%, and in one case there were 121.21 kilos (266.66 lbs.) of phosphorus removed from the pig, of which 72.42 kilos (159.32 lbs.) were found in the slag, a loss 48.79%.

Some slag-analyses have already been given (pp. 137–139).

Hasenclever has determined the average composition of the slags from German works, as follows:[3]

	A	B	C
	%	%	%
Phosphoric acid,	16.79	17.23	19.20
Silicic acid,	7.35	6.60	7.20
Lime,	50.66	53.28	49.00

(1) Stead (*Stahl und Eisen*, 1883, p. 260) gives the following composition of cinders:

	%
Metallic iron	70.30
Protoxide of iron	14.50
Manganese	0.11
Carbon	1.01
Silicon	0.63
Sand (impurity)	13.18
Phosphorus	0.05
Sulphur	0.06

(2) *Oesterr. Zeitschr. f. Berg- u. Hüttenwesen*, 1880, p. 396.

(3) *Zeitschr. deutsch. Ingenieure*, 1884, p. 207.

	%	%	%
Magnesia,	7.13	2.50	3.75
Peroxide of iron,	3.98	4.40	4.83
Protoxide "	7.85	10.66	9.00
" of manganese,	4.71	3.40	4.26
Sulphide of calcium,	1.06	1.06	0.92

The most obvious use to which this slag can be put is to return it to the blast furnace, as its high lime-and magnesia-content would be beneficial for siliceous and aluminous ores. At the same time its phosphorus would be reduced and would enter the pig, to serve again as fuel in the converter. In this way there has been no difficulty on a large scale in making pig with 7% of phosphorus, and experimentally with 20% and more (ferro-phosphorus).

The reduction of phosphorus, however, is connected with a not inconsiderable amount of slagging of phosphorus, as Hilgenstock[1] at Hörde has shown. For instance, with a pig containing

3.61%,	the slag	contained	0.18%	phosphorus.
3.79	"	"	0.19	"
4.57	"	"	0.38	"
6.07	"	"	1.22	"
6.24	"	"	1.74	"
7.20	"	"	2.39	"

The use of the slag for this purpose is, therefore, limited. It may also be remarked that the amount of slag yielded by the basic process would be far greater than any demand for it in this direction.

It may be considered that the phosphoric acid exists in the slag almost entirely as calcium phosphate, although a little is present as iron phosphate which has not been decomposed. Although it is likely that most of the phosphoric acid exists as tribasic calcium phosphate, $Ca_3 P_2O_8$, yet there separate from the slag certain thin, horn-like,

(1) *Stahl und Eisen*, 1884, p. 5.

transparent, tabular crystals, which, according to Hilgenstock,[1] have the following composition:

	%
Lime,	61.16
Phosphoric acid,	34.46
Magnesia,	1.90
Protoxide of manganese,	1.51
Silica,	0.91

with small amounts of iron and aluminum sulphide.

The pure crystals contain

	%
Lime,	61.10
Phosphoric acid,	38.14

and approach very near the composition of tetra-basic calcium phosphate, with lime, 61.20%, and phosphoric acid, 38.80%.

Groddeck and Broockmann, at Clausthal, attained the same result, and furthermore found that the brown, seldom blue or blackish colored, crystals had a hardness of 3.5.

This richness in calcium phosphate led to numerous experiments for using the slag for agricultural purposes. A direct application of it in a pulverized or granulated condition is unadvisable, not only on account of its content in the protoxides of iron and manganese, and in sulphur compounds, but also and especially on account of its difficultly decomposable silicates. It is used to the best advantage only on loamy soils which are at the same time sour (swampy), though even in these the humic acids decompose it but slowly. The mere loosening of such soils causes an amelioration of their condition, as it affords an opportunity for the decomposition of sulphur compounds, which must take place before the beneficial effect of the phosphate can be perceived.[2]

Ordinarily, however, the slag must be decomposed, and the obstacles to be overcome are not only the content of

(1) *Stahl und Eisen*, 1883, p. 498.

(2) *Stahl und Eisen*, 1882, II., p. 303.

the iron and manganese protoxides, and of silica, but also and especially the excessive amount of free lime. Concentrated acids can not be used to decompose it, as they coagulate the silica and thus prevent its separation by filtration. A complete decomposition of the whole slag not only requires a large quantity of acid, but also causes a precipitation of the dissolved phosphoric acid as ferric phosphate.[1] The method recommended by Croll, viz., fusing the slag with anhydrous carbonate of soda, treating the fused mass with water and precipitating the phosphoric acid with milk of lime, has not led to economic results.[2] Croll hoped to obtain as products, an iron ore free from sulphur and phosphorus, an assimilable lime phosphate, and a liquor that could be used in the manufacture of soap. He got all these, but the cost was too great.

A better method is that in which only the earthy phosphates and silicates are dissolved, the metals and metallic compounds remaining behind. Sulphuric acid has not been used with advantage,[3] because it changes a small part of the phosphoric acid into the soluble form, and moreover the high percentage of iron hinders the formation of salts soluble in water.

Scheibler[4] has communicated a method based on the use of hydrochloric acid : the slag is first exposed to an oxidizing roasting, in order to change the protoxides into peroxides or mixtures of proto and peroxides; the mass is then steamed, and on account of the formation of calcium hydrate falls to powder. The free lime remaining in the powder is removed by "floating" in water. For the decomposition, hydrochloric acid is used (not sulphuric, for this would form calcium sulphate) and in such amount that only the silicates and phosphates of the alkaline earths go into solution. The acid used is as dilute as possible. For 1

(1) *Zeitschr. des Vereins deutscher Ingenieure*, 1884, p. 206.

(2) *Berggeist*, 1883, p. 106.

(3) *Stahl und Eisen*, 1882, II., p. 303.

(4) *Zeitschr. des Vereins deutscher Ingenieure*, 1884, p. 207.

kilo (2.2 lb.) of slag, 1¼ to 1½ liters (16 to 18 ozs.) of acid are used.

Milk of lime is used for the precipitation, in such a way that either the silica is thrown down at the same time with the phosphoric acid, or, through incomplete neutralization, only the earthy phosphates. Small quantities of iron and unimportant quantities of silica are precipitated, while most of the silica remains dissolved in the liquor and flows away with it. After being filtered in a filter-press the material can either be used directly for agricultural purposes, or, by treatment with sulphuric acid, it can be made into superphosphate. According to Hasenclever there can easily be made a dibasic calcium phosphate containing from 35% to 37% of phosphoric acid.

Since vanadium behaves exactly like phosphorus, the whole amount of it in the ore is found in basic converter slag. According to G. Witz and F. Osmond[1] vanadium can be profitably extracted in the form of sodium vanadate, used as a pigment.

In 1881 Thomas obtained a patent for decomposing the slag with hydrochloric acid (R–P. No. 13554). His plan was to decompose the entire slag with hydrochloric acid, precipitate with lime and fuse with coal and sulphate of soda, with or without the addition of common salt, the products being oxide of iron, and phosphate of soda. This method has not been used successfully.

Finally, Frank took out a patent (R–P. No. 27106) to decompose Thomas-slag (basic converter slag) with magnesium chloride (in order to break up sulphur compounds), extract the caustic lime, and change the metallic protoxides into peroxides. The end in view is the manufacture of ammonio-magnesium phosphate, to be employed as a fertilizer. The economical side of this problem is not yet worked out; a favorable result would be of interest in the further utilization of the liquors from the Stassfurt kainite industry.

---

(1) *Stahl und Eisen*, 1882, II., p. 509

CHAPTER IX.

DEPHOSPHORIZATION IN THE OPEN-HEARTH.

AFTER dephosphorization in the Bessemer converter had attained success, it was important to try at least to use the open-hearth furnace for the same purpose, and it was hoped to reach the same result if the oxidation could be carried on in the absence of silica. These experiments were directed only to the production of ingot iron, for it was already known, from the puddling process, that in the manufacture of malleable iron the dephosphorization was incomplete, and at the best took place before the decarbonization.

To dephosphorize the pig in a cupola before charging it into the Bessemer converter was not advisable, since phosphorus is a valuable fuel in the converter. Nevertheless a basic lined cupola has often been recommended, as by Dittmann, who would line only the hearth with basic material, but charge dolomite with the pig and coke; and by Brauns, who would line the cupola with lime and oxide of iron, well rammed, and melt the iron under constant withdrawal of the slag. Basic lined cupolas have for some time past been experimented with, as for instance by Anderson, Wood, Warner, Bell, and Stead.[1] Such a furnace, however, dephosphorizes only incompletely, since each contact of the iron, containing carbon, with the slag causes a reduction of the phosphoric acid [and hence an absorption of the phosphorus by the iron,—Tr.], as indeed follows from the discussions in Chapter VI.

There remains therefore in reality only the open-hearth steel furnace, which, with a basic lined hearth, has been in successful operation. The open-hearth furnaces for this

(1) *Abthl.* III., p. 263, and p. 569; Brit. Specific., 1761, No. 759; 1763, No. 794; *Journal des Mines, tom.* IX., p. 8, *et passim*

purpose are built in exactly the same way as for the analogous acid process,[1] except that the bottoms and walls are of basic material. It would be advantageous to make the crown also of basic material, but so far no material suitable for this purpose has been furnished.

Basic Material.

The basic material is composed partly of a mixture of calcined dolomite and anhydrous tar (17 to 18 parts by weight[2]), partly of dolomite alone. The walls are moulded in beds of perhaps 50 mm. (2 inches) thickness, the material being tamped in with heated iron pestles. The bottom is generally made of dolomite alone, stamped in, without addition of tar, and has a thickness of 180 mm. (7.2 inches.)

The acid crown does not rest on the walls, but is supported by a special frame of iron. At the junction between the basic walls and the acid crown, is a layer of chrome iron ore mixed with tar,[3] or a layer of beauxite (hydrated oxide of alumina). When the furnace is completed, it is lined first with iron plates and then strongly heated. A neglect of this precaution would cause the tar to be consumed entirely, without furnishing the carbonaceous residue necessary for fritting the lining.

Mode of Operation.

The phosphoritic pig iron, in quantities of about 15 tons, is melted in the furnace itself (the working doors being closed), or is transferred in a molten condition from the blast furnace or the cupola. As soon as the contents of the hearth are in a liquid state, burned lime is strewn upon the surface. The scrap, or iron ore, for reducing the carbon, is added in three or four separate lots. After each addition of scrap or ore, lime is strewn upon the surface of the bath. The slag is removed before the addition, and

(1) *Abthl.* III., p. 536, *et seq.*

(2) Compare p. 59.

(3) At Alexandrowsky, Tellander, *Stahl und Eisen*, 1882, p. 599.

(4) At Creusot. *Ancre de St. Dizier*, 21 März, 1883.

especially before the final addition, of spiegel, or ferromanganese. For every ton of iron added is to be reckoned one minute of work.

For promoting the dephosphorization, Würtenberger in Ruhrort, has recommended the blowing in of air, and has carried it out successfully. He has overcome the difficulty of manufacturing a suitable apparatus, by employing a special arrangement, protected by patents Nos. 10815 and 13679. One or more wrought-iron pipes, covered with fireproof material, project horizontally into the furnace; at the middle of the hearth they bend downward and dip a certain distance beneath the surface of the bath. With the main pipe is connected a box or bin from which can be blown in such substances as may be required for rendering the slag fluid. An arrangement of this kind was used at the Phœnix Works in Ruhrort, but has not found a wider application, as the oxygen of iron ores has shown itself to be a better oxidizer.

Hädicke has patented (No. 17143) a similar arrangement. It consists of a vertical water-jacketed pipe dipping into the bath. [The German name for this is *Frischkolben;* there is no English equivalent unless "refining-tuyere" is the meaning.—Tr.]

Garnier in France has experimented with a somewhat different arrangement.[1] On the hard bottom of the hearth, which consists of lime, dolomite, magnesite, or of alumina, oxide of chromium, etc., he has a second hearth, looser than the other, and consisting of unburned carbonate of lime. On this second bottom is a thin covering of iron ore. The surface is sintered by a strong heat, and upon it is the fluid pig iron. The carbonic acid evolved gradually from the lime carbonate of the loose bottom, oxidizes the bath of metal. The chief reaction apparently consists in the stirring around of the bath with the iron ore loosened from the bottom. For every new heat the loose bottom is renewed.

---

(1) *Métallurgie et la construction mécanique*, 1881, No. 23; and *Stahl und Eisen*, 1883, II., p. 518.

The process has been investigated at Aubin in France, and at Königshütte in Upper Silesia. At Aubin the pig iron had the following composition:

	%
Carbon,	2.73
Silicon,	2.56
Phosphorus,	0.47
Sulphur,	0.20
Manganese,	0.60

The rails, using pure scrap and ferromanganese, contained as follows:

	%
Carbon,	0.37
Silicon,	0.14
Phosphorus,	0.12
Sulphur,	0.20
Manganese,	0.65

Combinations of the open-hearth with other processes, as for instance Krupp's method, have been already described.

Dephosphorization in the basic open-hearth furnace is considerably more costly than in the Bessemer converter, and is therefore suitable only for iron of a certain quality. It has, however, the advantage, that iron of a low-phosporus content can be conveniently worked. When steel is to be made by using ore in the open-hearth [instead of scrap, or with scrap,—Tr.] phosphoritic iron ore can be used with impunity.[1]

In concluding, mention may be made of Osann's method (German patent, No. 9898), for desiliconizing in an acid Bessemer converter, and dephosphorizing in a basic open-hearth, a method which seems feasible, but which has been rendered unnecessary by the success of the simple open-hearth process.

---

(1) *Abthl.* III., pp. 497, 547.

CHAPTER X.

ECONOMICAL RESULTS OF THE BASIC BESSEMER PROCESS.

SELDOM has a process connected with iron smelting attained success as quickly as the basic Bessemer. In an incomparably shorter time than the acid process it has well-nigh traversed the globe, obtaining in Germany perhaps its firmest foothold, where the occurrence of highly phosphoritic ores offered a more favorable prospect than was offered in America, England, or even France. Foremost amongst the causes that have led to this result is the German patent-law.

Under the old Prussian laws, considering the numerous experiments that had paved the way for Thomas's patent, and the publications and announcements that preceded his application, a patent could not have been obtained. Even under the German laws the matter was doubtful. The participants in the personal negotiations of November 21st, 1879, will never forget the anxious discussions which seemed to result partly in favor of the discoverer and partly in favor of his opponents. It was upon this date that the adjudication of the patent took place, together with the statement of the new patent claim, viz., the three new moments of this dephosphorization method.

Germany was able to benefit by the patent only because the Patent Office freed itself from the narrow standpoint of the mere letter of the law, and because it recognized the importance of the matter and perceived that the apparently slight deviations of the claim from what was already known were in reality new, constituting in fact a discovery. Furthermore, the Patent Office perceived that the announcement was sufficiently clear to enable an expert to put the method into practice, since the form in which it was put, though perhaps not the best, was good enough to ad-

mit a remodelling of the description, excluding every doubt.

There is no doubt of one thing, viz., that the owners of the patent, the Hörde Mining and Smelting Association, and the Rhine Steel Works, would have been very cautious in making those careful and wearisome experiments without which the process would not have been practicable had they not been protected by the patent law.

These two things, viz., the favorable conditions existing in Germany for the production of phosphoritic pig iron, and the patent law, have caused the rapid development of the process. The assurance of the possibility of producing from suitable raw materials ingot iron lower in carbon than could be obtained by the acid process from the best materials, has given the process stability. But all the difficulties are not yet overcome. For instance, as regards the welding properties of even the perfectly soft iron there is still much to be desired. Disregarding the difficulties which interfere with the welding of every ingot iron,[1] it appears that the blow-holes in basic-blown ingot iron oppose a far greater resistance to the uniting of their walls; the reason for this being perhaps the very thin layer of lime dust on the inside, carried over by the gases causing the blow-holes.

A raw material, which formerly could be utilized only through the puddling process and even then to no great advantage, has now become a material desired for the manufacture of a product showing many, until now unknown, good qualities.

At the present time the manufacture of ingot iron by the basic process is more costly than by the acid process. The difference is due entirely to the greater cost of setting up and maintaining the basic lining, and although it is in a measure counter-balanced by the less cost of the pig iron, yet it is not entirely so.

The introduction of the basic process therefore at any

---

(1) *Verhandl. d. Vereins zur Beförderung d. Gewerbfl.*, 1883, p. 146; and *Mitthl. aus d. Königl. techn. Versuchsanst. zu Berlin*, 1883, p. 70.

one place depends chiefly on the salability of the product, and in general it may be said that it is best to use the acid process for the more highly carbonized kinds of ingot iron, especially for ingot steel, and the basic process for low-carbon ingot iron, as, for instance, at the Rhine Steel Works, where both are used.

As regards the pig iron there is the general rule that its cost is in proportion to the consumption of coke. The consumption of coke, however, other things being equal, as for instance, the richness of the ores and the use of fluxes, depends upon the amount of carbon required for the direct reduction of silicon, manganese, and phosphorus.

The same amount of heat, however, that was used in the blast furnace for this reduction, becomes again available in the Bessemer process. If no heat was lost by radiation, or conduction, or by causes extraneous to the process itself, the very same quantities of heat required for reduction in the blast furnace, would be regained in the converter, in the oxidation of the same elements. Of these elements, silicon is the most important in the acid process, and phosphorus in the basic process. But these two elements comport themselves very differently in the blast furnace.

The lower the temperature in the hearth of a blast furnace, the lower the content of silicon in the pig; but this is not the case with phosphorus. The temperature of the blast furnace always suffices to reduce completely within certain limits the phosphoric acid brought in by the materials.

It is impossible to prevent the phosphorus from entering the pig, while silicon can be prevented, and, indeed, the more easily the richer the mixture is in manganese. On this account it is economical to employ the basic process wherever the materials for producing pig iron are phosphoritic, or, at least, so phosphoritic that the phosphorus-content in the pig iron exceeds the limit found most beneficial in malleable iron, viz., 0.1%. We come thus again upon the discussion of the lower limit of the phosphorus in the basic process, so that, as already shown on page 20, a pig iron with a phosphorus-content between 0.1% and

2.0% is not now suitable for the Bessemer process. If the percentage of phosphorus in the materials lies between these limits, the pig iron must either be used in the puddling process, or more phosphorus be brought into the pig, and this uses the same amount of heat as is regained in the after-blow. The cost of pig iron of the same grade varies with the character of the ores.

The conditions at the Ilsede works are peculiarly favorable, for the ores used there require no special mixing. It is sufficient merely to mix the different ores of the Gross-Bülten with those of Ohlei, that is, from the different regions of the northwest border of the Hartz Mountains, to obtain the necessary percentages of phosphorus and manganese, and to secure thereby a product low in sulphur. The cost of the pig is below $10 a ton.

The Luxemburg works are less favorably situated. The ores used there are too high in sulphur (0.5% to 0.7%, sometimes up to 1.5%), and too low in manganese, less than 1%, although the amount of phosphorus is sufficient. These ores have to be mixed with the manganese ores of the Lahn, which are free from sulphur.

In Lorraine, also, the conditions are somewhat unfavorable, for the siliceous ores there require the addition of lime. In the year 1882 the cost of making a ton of basic Bessemer pig was $10.25 in Luxemburg as against $10.75 in Lorraine, as the following table will show.

	Luxemburg.	Lorraine.
Native ore,	$1.40	$1.275
Foreign ore (Nassau),	2.00	2.00
Limestone,	—	0.225
Coke,	5.275	5.65
Wages,	0.75	0.75
Miscellaneous,	0.825	0.85
	$10.25	$10.75

In the Saar district the cost was higher, about $11.50, and in Westphalia, in spite of the convenience to mill-and

forge-cinder, higher still, the minimum cost being $11.75, the maximum $13.00, and the average $12.00.

If we take the price of pig iron and attempt to calculate from it the cost of ingot iron, we have, first of all, to consider the loss of iron in the slag, or, if the cost is to be reckoned on the ton of ingot iron, we have to add to the cost of the pig, the value of the iron in the slag, and the cost of converting.

In Germany the cost of converting, per ton of pig iron, is as follows:

	$	$
Ferromanganese, or spiegel,	0.625	to 1.287
Wages,	0.770	to 1.125
Steam-coal,[1]	0.205	to 0.325
Cupola-coke,[1]	0.805	to 0.950
Moulds,	0.202	to 0.310
Lime charge,	0.062	to 0.625
Basic lining,	0.820	to 1.000
Repairs,	0.500	to 0.575
Interest and Sinking Fund,[2]	0.250	to 0.250
Miscellaneous,	1.125	to 1.200
	$5.364	$7.647

Putting the price of pig iron at	$10.00
Loss[3] at	1.50
Cost of conversion at	5.125
We have for one ton of ingot iron	$16.625
With pig iron at	$8.125
Loss at	1.217
Cost of conversion at	7.650
One ton of ingot iron will cost	$16.992

The lower cost is for the soft (mild) kinds of ingot iron;

(1) Including heating up.

(2) A Basic Works with 3 converters costs about $250,000.

(3) 15%.

the harder kinds, requiring addition of spiegel, are more costly. When, instead of 37½ cents for ferromanganese, one has to pay from $1.12½ to $1.62½ (an average of $1.30), for spiegel, the cost per ton of ingots will be $17.92½ or even $18.92½.

The excess of cost of the basic over the acid process is on account of the basic lining, the addition of lime, the frequent repairs, and the higher wages. This excess can be stated at $1.12½ per ton of ingots, and must be counterbalanced by the lower cost of the pig iron. That basic pig can be produced at a lower cost than acid pig is evident from the fact that less costly ores are used, and that less fuel is required for blowing it, because of its low silicon- and carbon-content. In addition to the items of cost already given we have to consider the royalty on the patent. Most of the German works pay the patent owners 87½ cents per ton, while some have paid a certain gross sum for the privilege,[1] as for instance the Silesian Works (Laurahütte und Oberschlesischer Eisenbahnbedarf) each $37,500; the Phœnix and Gutehoffnungshütte each $87,500; the Union and Bochum Works $112,500 and $100,000 respectively.

The constant increase in the number of basic plants shows that basic converter steel can hold its own in competition with acid steel, when the works are well located.

At present there are the following works:[2]

I. IN GERMANY.

RUHR DISTRICT.

1. Hörde, 3 converters of 10 tons each. Total 30 tons.
2. Rhine Steel Works, 2 converters of 6.5 tons each. Total 13 tons.
3. Bochum, 3 converters of 4.5 tons each. Total 13.5 tons.
4. Oberhausen, 2 converters of 6 tons each. Total 12 tons.

(1) According to *Ancre de St. Dizier*, 1884, No. 2462.

(2) Courtesy of Mr. Osann, Secretary of the German Iron Smelters' Union.

5. Union Dortmund, 2 converters of 9.5 tons each. Total 19 tons.
6. Hoesch, Dortmund, 3 converters of 10 tons each. Total 30[1] tons.
7. Phœnix, Laar, 3 converters of 10 tons each. Total 30 tons.

AACHEN DISTRICT.

8. Rotheerde, 3 converters of 10 tons each. Total 30 tons.

PROVINCE OF HANOVER.

9. Peine (Ilsede), 4 converters of 10 tons each. Total 40 tons.

SAAR DISTRICT.

10. Neunkirchen (Stumm), 2 converters of 8 tons each. Total 20 tons.

LORRAINE AND LUXEMBURG.

11. Hayingen (de Wendel), 4 converters of 8 tons each. Total 32 tons.
12. Luxemburg Iron Co., Dudlingen, 4 converters of 10 tons each. Total 40 tons.

UPPER SILESIA.

13. Friedenshütte (Railway service,[2]) 3 converters of 10 tons each. Total 30 tons.
14. Königshütte[3], 2 converters of 10 tons each. Total 20 tons.
    Königshütte, 1 converter of 7.5 tons. Total 7.5 tons.

---

(1) In construction.
(2) In construction.
(3) In construction.

Germany, therefore, has 14 separate establishments, with 36 converters, and 5 now building.

II. IN AUSTRIA.

BOHEMIA.

Kladno, 3 converters of 5 tons each. Total 15 tons.
Teplitz, 2 converters of 6.5 tons each. Total 13 tons.

MORAVIA.

Witkowitz, 2 converters of 8 tons each. Total 16 tons.

III. IN RUSSIA.

Warsaw Steel Works, 2 converters of 10 tons each, Total 20 tons.

IV. IN BELGIUM.

Angleur, 2 converters of 6 tons each. Total 12 tons.
Athus, 2 converters of 10 tons each. Total 20 tons.

V. IN FRANCE.

Creusot (Schneider), 2 converters of 7 tons each. Total 14 tons.
Joeuf, 4 converters of 10 tons each. Total 40 tons.
Commentry, 2 converters of 10 tons each. Total 20 tons.
Mont St. Martin, Longwy, 3 converters of 10 tons each. Total 30 tons.
Valenciennes, 2 converters of 10 tons each. Total 20 tons.

VI. IN ENGLAND AND SCOTLAND.

Eston (Bolckow, Vaughan & Co., Middlesbrough), 6 converters of 15 tons each. Total 90 tons.
Northeastern Steel Co., Middlesbrough, 4 converters of 10 tons each. Total 40 tons.
Sellerhall Co., Middlesbrough, 1 converter of 4 tons. Total 4 tons.

Staffordshire Steel and Ingot Co., 3 converters of 5 tons each. Total 15 tons.

Merry & Cunningham, Glengarnock, 2 converters of 9 tons each. Total 18 tons.

Glasgow Iron Co., Wishaw, 3 converters of 7 tons each. Total 21 tons.

VII. IN NORTH AMERICA.

Harrisburg, 2 converters of 10 tons each. Total 20 tons.

		Tons.
Germany has	14 works, 41 converters.	Total cap. 367
Austria has	3 works, 7 converters.	Total cap. 44
Russia has	1 work, 2 converters.	Total cap. 20
Belgium has	2 works, 4 converters.	Total cap. 32
France has	5 works, 13 converters.	Total cap. 124
England has	6 works, 19 converters.	Total cap. 188
North America has	1 work, 2 converters.	Total cap. 20
In all,	32 works, 88 converters.	Total cap. 795

With ten heats in 24 hours, and 300 working days, the yearly consumption of pig iron might be 2,555,000 tons. Since however the charge is only from 70 to 80 per cent., and the yield only 68 per cent., the annual product would be about $1\frac{1}{10}$ millions of tons. And when we consider further that for every converter in blast there are two or three out of blast, the production of basic Bessemer steel falls to 500,000 or 600,000 tons a year.

As a matter of fact, according to Gilchrist,[1] the present yearly output of basic Bessemer steel is 572,604 tons, which however will be increased to 1,196,000 tons by the 9 converters building in England, and the 25 on the continent.

According to Transenster[2] the entire product of ingot iron in the world is 6,500,000 tons, and thus a very large part of it is made by the acid process.

---

(1) *Stahl und Eisen*, 1883, p. 55.

(2) *Stahl und Eisen*, 1883, II., p. 477.

The further development of the basic Bessemer process depends on the occurrence, in large quantities, of ores, which on account of their phosphorus-content are not suitable for the acid process.

In Germany at least 90% of all the available iron ores contain more than 0.1% of phosphorus.

In England about 16% of the iron ores are low in phosphorus, the others contain generally from 1% to 1.5% of phosphorus.

The product of the German blast furnaces (12 in number) making basic pig in 1883 was 369,685 tons,[1] corresponding to about 314,000 tons ingot iron; of acid pig in the same year there were blown 495,920 tons, and the imports were 125,000 as against 123,109 tons in 1882.

It is evident that the acid process largely predominates over the basic, but the progress the latter has made is astonishing, when we consider how short the time has been since its discovery. Germany can count itself fortunate in having made such excellent use of the discovery of the Englishman, Thomas.

---

(1) *Stahl und Eisen*, 1884, I., p. 120; see also *Kärnth. Zeitschr.* 1880, p. 504, 1881, pp. 18, 318; Kerpely, *Fortschr.* 1879 *bis* 1880, pp. 3, 4; *Zeitschr. deutsch. Ingenieure*, 1881, p. 318; *Ancre de St. Dizier*, 1884, No. 2467, p. 3.

APPENDIX.

DESULPHURIZATION OF PIG IRON.

THE fact that iron and calcium sulphate at red heat transpose into oxide of iron, lime, and sulphide of iron, interferes with the desulphurization of pig iron in the basic converter. The sulphide of iron remains undecomposed even after the dephosphorization, since, in association with the magnetic oxide formed, it is stable.[1]

Prof. Finkener, at Berlin, first discovered this. It is at the present time a considerable hinderance to the further extension of the basic Bessemer process in its application to all kinds of pig iron. A part of the sulphur is removed by the action of the slag, but the diminution of the free silica, while indeed conditioning the dephosphorization, is a positive disadvantage to the desulphurization. On this account an iron rich in silicon can be desulphurized to a higher degree than one poor in silicon.

Some smelters[2] think that manganese in the pig has a favorable effect upon the desulphurization in the basic process, but the fact is neither demonstrated nor theoretically explicable.

From all this, one is compelled to employ a pig low in sulphur, or, when using ores high in sulphur, to remove this by roasting and washing. The same result may be obtained by using in the blast furnace[3] a charge rich in lime and manganese.

Rollet has conducted the most numerous and the most exhaustive experiments on the desulphurization of pig iron. He first proposed a method which is described in

---

(1) See page 153.

(2) *Stahl und Eisen*, 1882, p. 165.

(3) *Abthl.* II., p. 590.

German Imperial Patent No. 14647. This is based on the assumption that the sulphur is removed either through an oxidizing reaction in presence of a basic slag and with a relatively lower temperature (as in puddling), or through a reducing reaction in presence of a basic slag and with a relatively higher temperature (as in the blast furnace).

So Rollet recommended two methods: first, a fusion of the pig in a basic lined cupola, in which reduction is connected with high temperature as in a blast furnace. Snelus[1] had already used this method, though not for desulphurizing. The second method was to be carried out in a basic lined revolving furnace[2] or a basic Bessemer converter. In this case the oxidation is restrained in part by a layer of carbon (stone-coal or coke).

Rollet supposed that the sulphur was at first oxidized, and, before it could be again reduced by the iron containing carbon, was carried into the slag in which it was held as sulphide by the reducing effect of the carbon.

Whether these suppositions were correct or not, all the investigations carried out in Germany in this direction came to nothing. The experiments were so arranged that the pig, after the charging of the lime into the converter, was covered with a layer of coal, which was renewed as the sulphurous slag was removed. But the pig could not be freed of sulphur. The cost of the operation and the time required were disproportioned to the slight success. Better results seem to have been reached in France with the cupola.

The following arrangement was used at Givors and Saint-Chamond:[3] a water-cooled cupola was lined with dolomite, and the blast was carried by four rows of noses or tuyeres, placed over each other. The slag was basic, and the temperature high. For one ton of pig there was used 286 lbs. of coke with 8 to 9 per cent. of ash, 176 lbs. of limestone, and 55 to 59.4 lbs. of fluorspar.

---

(1) British Patent No. 908, 1872.

(2) *Abthl.* III., p. 327.

(3) *Ancre de St. Dizier*, 1883, No. 2417, p. 3.

According to his own account, Rollet has removed in such a furnace 95% of the sulphur in pig iron, attributing it to the intense oxidation of the pig by the blast.

By the use of the method given on page 179, for dephosphorizing in the open-hearth, Garnier thinks he can also remove the sulphur, if he follows Rollet's plan of charging limestone and coal at the same time.[1] The proof appears to be lacking.

Finally, mention may be made of Laurent Cely's method, the removal of sulphur from iron by the action of moist hydrogen.[2] Cely supposes that the removal can be effected by the combination of hydrogen and aqueous vapor, although it is known that neither can effect it alone. The results so far do not incline one to expect success even from the combination.

It is still an open question how to desulphurize, practically and economically, a phosphoritic pig iron in the basic Bessemer converter.

---

(1) *Stahl und Eisen*, 1883, II., p. 519.

(2) *Stahl und Eisen*, 1883, I., p. 306.

[END OF THE TRANSLATION.]

DEPHOSPHORIZATION

IN THE BASIC OPEN-HEARTH FURNACE.

[SUPPLEMENTARY CHAPTER BY ERNST PROCHASKA.]

THE basic open-hearth process has made most wonderful progress in the last six years. This process now takes the same position which the acid open-hearth or Siemens-Martin process held for so long a time. It surpasses as regards to quality of steel all the other processes and allows the use of cheap raw materials. The basic open-hearth process is of a great value to the steel industry, as it enables the metallurgist to use materials with a medium amount of phosphorus, which were until now barred out from use.

The best results were obtained in the basic open hearth on a magnesite bottom. The increased demand for magnesite for the new process has already led to the discovery of new deposits. This enables magnesite to be used in large quantities, as the price is a good deal lower. Styrian magnesite, especially, has a superior composition, low in silicon and with sufficient oxide of iron, which makes it preferable for the basic process.

A piece of magnesite placed on a siliceous brick (fire brick) and exposed to the highest heat of a regenerative gas furnace, remains intact. Dolomite exposed to the same treatment fluxes. This is a very valuable quality of magnesite. If magnesite is calcined at a moderate heat, it takes up water very quickly and forms a quick-hardening composition similar to cement. If calcined at a high temperature, magnesite does not absorb either water or carbonic acid, and can be stored away without fear of slacking. For this reason magnesite is preferable to dolomite or lime.

The calcining of the carbonate of magnesia at a high heat causes it to shrink about 25%. Magnesite has a very great resistance against the oxide of iron and the silica in

the basic slag. The burnt magnesite can be formed into bricks similar to ganister, and gives a regular and sharp-cornered brick.

The method of making magnesite bricks changes according to the composition of the raw material. The calcining takes place in a shaft furnace or in a kiln. For entirely pure magnesite 4 to 5% of clay may be used to improve the plasticity. In general, additions, which lower the refractory qualities of the magnesite, ought to be avoided. The best method is to mix 90 parts of dead-burnt magnesite with 10 parts of caustic magnesia, which is only heated until the carbonic acid is driven out. Only sufficient warm water is added to this mixture to enable it to be formed into balls. The paste made in this way has the consistence of the quartz used for the Dinas brick. The bricks are formed in a powerful press or under a steam hammer specially constructed for this purpose. The bricks are now dried and can be used without further burning, but it is decidedly better to burn them at a white heat. If clay is preferred as a binding material, the operations are the same and the bricks are used for the same purpose. The magnesite used for the bottom is prepared in a similar way to the material used for the bricks. But precaution has to be taken only to mix as much as required because it hardens very quickly.

The magnesite for repairing should only be slightly burned, just sufficiently to drive off the carbonic acid. It is better to mix with the burnt magnesite small quantities of silica, sand, or iron ore, because a too refractory material is not suitable for filling out holes in the bottom.

Construction of a Basic Open-hearth Furnace.

The best furnace for the basic open-hearth process is the Siemens-Martin furnace. The Pernot furnace did not succeed everywhere. A construction in which the gas and air regenerators are separated from the furnace proper and do not support it, is preferable. Three doors on the charging side of the furnace are recommended. The repairs have to be made very carefully and the arrrangement of the

three doors allows a perfect view of the bottom. Two doors may be put in the tapping side of the furnace, to repair the walls of the charging side, but these doors are not necessary, because the repairs on the front wall are very slight and can be sufficiently well made from the front doors.

The plates ought to be made from the best iron to prevent cracks, and for this reason it is preferable to make the plates as small as possible. This also enables the walls to be repaired from the outside in places which cannot be reached from the doors. To facilitate the repairs on the gas and air flues, the side walls should not be covered with plates. The furnace ought to be bound very strongly at top and bottom. The arrangement of the gas and air ports is of great importance. In the early days the combustion took place outside the hearth, i. e. the mixing of the gas with the air commenced at the orifice of the ports. This faulty arrangement is now abandoned everywhere. The furnace did not get sufficient heat, and the roof near the ports burnt down very quickly. This system is now replaced by a combustion in parallel, vertical, or horizontal, layers. The latter arrangement is better. The roof is always cooled off by the air, and the combustion takes place on the surface of the metal bath. The running of such a furnace is much easier, because the combustion takes place at one point and no longer in the whole furnace. The gas flue ought to be made as long as possible and be inclined towards the hearth and a little against the long sides of the furnaee. This latter arrangement has a great advantage. The gas does not work against the walls of the furnace, as it would if the gas flues were parallel. When the bottom plate and the side plates are put into position, the flues are constructed with good silica bricks. The bottom of the hearth is usually 12″ to 14 thick, and made of magnesite bricks. The brick bottoms are a great deal more durable than the fritted magnesite bottoms. The many joints are not objections as the bricks are laid in several layers with alternate joints. The fritted bottom has many disadvantages, if not made with the

greatest care, and it is not possible to prevent accidents. When the bottom is ready, the walls are built up with bricks or calcined magnesite. It is not necessary to make the basic lining of the furnace higher than the bottom of the gas flues, because the metal bath can never rise to that height. This arrangement is preferable to the one which has the walls made of magnesite bricks up to the roof, because it is cheaper and easier to repair. The silica bricks are put on top of the magnesite bricks. The silica brought into contact with magnesite does not flux. A careful and peculiar laying of the silica bricks prevents all accidents on the skew-back. When the acid part of the furnace is finished, the roof, which rests better against the wall than against the plates, is put on. This combines all parts of the furnace and gives a solid construction. When the brick-work is finished, a wood fire is lighted and the furnace dried as usual. The tapping hole is made after the furnace begins to get warm. It is cut out of the wall and plugged up with coke powder or magnesite. The magnesite should not be rammed too tightly, so that a later opening of the tap hole is easier. During the heating of the furnace the bottom is finished by fritting the necessary magnesite in thin layers. The Brymbo Steel Company built in the year 1883 four 12-ton and two 20-ton basic open-hearth furnaces.[1] The furnaces were arranged in a line. The charging platform on one side is sufficiently above floor level to admit the casting ladle and carriage, which runs on rails over a pit parallel to the furnaces. Each furnace is provided with a separate chimney, ordinary butterfly reversing valves of ample size, and regenerator chambers of large capacity, but similar in shape and construction to most modern open-hearth furnaces.

The furnace proper is composed of two wrought-iron sides supported by "H" iron buck-stays well braced together at the top and bottom. The ends are left open. Holes are cut in the plates for the three doors on the

(1) See The Bulletin of the Am. Iron and Steel Ass'n, No. 20, June 12, 1889, "The Manufacture of Basic Open-Hearth Steel," by T. H. Darby.

front side of the furnace and another hole is made at the back for the tap holes. The plates are also cut away to allow air to circulate for cooling purposes under the furnace-bottom and bridge plates.

The bottom of the furnace is built up of cast iron plates, supported on "H" iron girders, so as to form a rough outline of the furnace bottom when lined and ready for work. The girders rest on angle irons attached to the side plates. Any movement or subsidence in the chambers must therefore affect the hearth as a whole, and thus prevent the cracking of the material from which the hearth is made. The silica blocks at each end of the furnace are built in the usual manner, but the roof and side walls are built after the hearth has been rammed in. The former is placed some way above the metal, so as to avoid splashings of the basic slag. The roof is level from block to block. The ends, however, are well inclined, to bring the flame down on the metal.

On the iron plates for holding the dolomite hearth, fire bricks are placed so that no part of the basic hearth is more than 15″ thick when finished. As soon as all the brickwork is dry, hard burnt dolomite. well ground and mixed with as little anhydrous tar as necessary to make it stick together when compressed, is rammed with hot irons until the desired shape of the hearth is built up. The tap hole is made by a round piece of wood which is left in and burnt out as the furnace heats up. The shrunk dolomite or basic material is brought up to the bottom of the doors and to an equal height all round; over this a layer of about two inches of chrome ore, also ground fine and mixed with tar, is rammed to act as neutral separator between the acid and the basic portions. Chrome ore is also rammed in between the silica blocks and the hearth. The side walls and jambs are built on the chrome ore. The roof is then put on and the furnace heated up at first with a coal fire. There should be no stoppage in putting in a hearth and finishing the roof. A 20-ton furnace should thus be completed in thirty-six to forty hours. When the furnace is properly dried and heated, the hearth will become very

hard. The tap hole should be cleaned out and then filled with several inches of dry ground basic material. This should be pushed against a scraper held from the middle door. Anthracite coal is then rammed in and the outside of the tap-hole is covered with damp sand. The furnace is now ready to be charged.

The works of the "*Staats Eisenbahn Gesellschaft*" at Resicza, Hungary, have used the basic open-hearth process since June, 1886.[1] Although they were able to produce out of their own ores a steel in the acid Bessemer converter without more than 0.07% of phosphorus, they concluded to improve still more the quality of the steel. Therefore it was proposed to use the basic open-hearth process. The first trials in a small furnace with movable bottom proved such a great success, that all the acid open-hearth furnaces were lined with basic lining. The general construction of the furnaces was not changed, except that the regenerator chambers were enlarged to get a higher temperature in the furnace. The gas producers, four for each furnace, have inclined grates and natural draft. The inside is square and measures 6 ft. 6¾″. The furnace itself has a hearth 12 ft. 4″ long, and 9 ft. 10⅛″ wide. The regenerator chambers, originally 11 ft. 9⅛″ high, are now 13 ft. 11¼″. The width is 4 ft. 11″, and the length 8 ft. 4⅞″. The furnace has three charging doors. The gas enters through three ports and the air through two ports on the same level and situated between the gas ports. The banks are cooled by chillplates. These plates are covered with 12″ of magnesite brick. The walls are made of magnesite bricks 6″ thick. In the enclosed space formed by the magnesite bricks, dolomite is rammed 12″ high. At the first trials chrome ore was used instead of magnesite. But the basic slag cut the chrome ore considerably. Therefore as magnesite can be got at Resicza a good deal cheaper than chrome-ore, the magnesite is used as neutral lining. To make the roof entirely independent

(1) See *Stahl und Eisen*, No. 5, 1889, p. 396, *et seq.*: "The Manufacture of Ingot Iron on the basic hearth at Resicza," by A. Gouisy.

from the basic material and to avoid any pressure on the magnesite, a peculiar construction proposed by Mr. W. Schmiddhammer was used for the roof. [See Fig. 66.]

BASIC OPEN-HEARTH AT RESICZA.

FIG. 66.

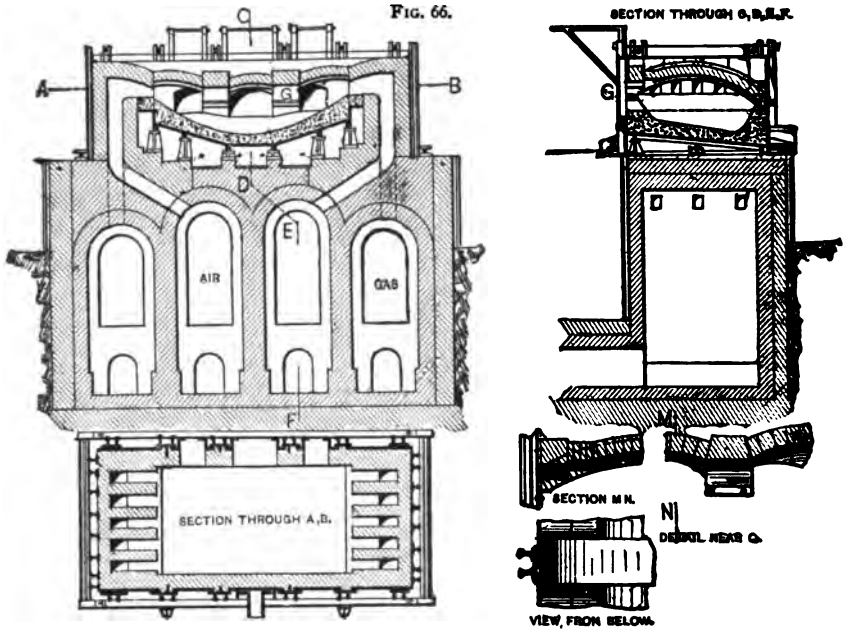

Between the doors and on the opposite places on the back wall angle irons are fastened to the plates; these angle irons are used as skew-backs for the arches which run across the furnace. Between the brickwork of the ports and these arches, and between the arches, are arranged longitudinal arches, close to the plates, which support the roof proper. In this manner the whole weight and pressure of the roof is supported by the angle irons and the brickwork of the ports. The dolomite is calcined and ground up and mixed with 20% of well boiled tar. This tar concrete is rammed in the bottom with hot iron rammers.

Description of the Run of a Basic Open-hearth Heat.

The variations of the charge in the basic open-hearth process are just as great as in the acid one. A preheating

furnace may be used or not. This is of no importance for the run of the heat. The preheating of scrap is only of influence for the proportion of scrap and pig iron which constitutes a heat.

The use of a pig iron high in sulphur should be carefully avoided, as this element can not be separated any more easily in the basic open hearth than in the converter. The heat is easier performed, according to the smallness of the quantity of phosphorus and silica in the pig iron. The limits between which the composition of the pig iron may vary are very wide with the exception of sulphur. The following figures are admissible:

				%
Phosphorus,	from	traces	to	2.
Sulphur,	from	traces	to	0.15
Silicon,	from	0.50	to	1.50
Manganese,	from	traces	to	1.50

At the test at the Farnley Iron Co. near Leeds, the following brands were used.

	Farnley. %	Hematite. %
Iron,	93.111	93.194
C,	3.642	4.208
Si,	1.245	2.285
S,	0.013	0.004
P,	0.601	0.058
Mn,	1.188	0.152

It was made possible to use pig iron, with a large amount of sulphur, by remelting it in a basic lined cupola. But this process is always very expensive and it is better to get a pig iron low in sulphur in the blast furnace than to purify it in the remelting.

One of the simplest cases is shown as an illustration, viz., the working of a pig iron with a fair amount of phosphorus and low in sulphur. The composition of the scrap is of no importance. No preheating furnace is used. The open-hearth furnace has a capacity of 8 to 10 tons.

At first the bottom is covered with limestone or lime in pieces of the size of one's fist. If possible, the use of lime is preferred to that of limestone. In the early days it was thought that the carbonic acid driven off from the limestone would quicken the refining process; but this is wrong, because the carbonic acid is already driven off before the bath commences to melt and it only cools off the hearth. If a rich iron ore low in silica is available, it is used. The slag becomes a good deal more refining. Instead of rich ore, lime ore, or rolling mill cinder, is very good to be used. The limestone or the lime should be as low in silicon as possible. The pig iron is charged near to the ports through the side doors and the scrap is put in through the middle door in the centre of the hearth. The pig which melts on the banks flows down in the middle of the hearth and comes in contact with the lime and the oxide of iron from the ore. It forms a sort of pasty mixture of pig iron scrap, lime, and oxide of iron. This pasty condition is very favorable for the separation of the phosphorus, silicon, and carbon. Gradually the temperature rises and the more or less basic slag separates from the metal bath. If the bath is pretty warm and the slag sufficiently liquid, it is drawn through the middle door. It is very seldom that the total amount of phosphorus is eliminated with the first charge of lime. More lime is added and more scrap charged. Before each new scrap-charge, the slag is drawn. Clean scrap is charged at the end of the heat. If the heat is finished, i. e. the test does not show the smallest amount of phosphorus, the slag is drawn off as completely as possible to heat the steel bath properly. Further on, the necessary additions of spiegel or ferro are made, according to the quality of the steel. After this the heat is tapped. Sometimes the moulds are filled directly from the furnace, but oftener a casting-ladle is used, especially if small ingots are cast.

The following shows the composition of a basic heat of 8 gross tons:

Pig iron, 9,790 lbs.; scrap, 9,790 lbs.; ferromanganese, 121 lbs.; limestone, 1,760 lbs.; ore, 220 lbs.

It is clear that these proportions are not fixed, but vary according to circumstances and the quality of the materials.

The loss varies very much, according to the quality of the scrap. At works which use nothing but thin scrap of sheet iron, used for tin plates, there may may be a loss of 16 to 18%. Other works which take care to bundle the scrap may have only 8 to 9% loss for the charge, or 11 to 12% calculated on the output.

At Resicza the process is conducted in the following way:

The furnace after the necessary repairs, which occur mostly on the slag line, is charged with the whole heat at once. The roof lasts a great deal longer by this method of charging, as it is not cooled off so often.

The heat consists of 7,700 lbs. of gray or mottled pig iron and 8,800 lbs. of mixed scrap, which is all charged cold; 990 lbs. of limestone are equally spread over the whole heat. The limestone is dissolved by the acid slag and neutralizes it. After the heat is melted down, the slag is boiled down and drawn out, through the charging doors, with hooks. After that the test is taken as usual. The decarbonization is supported by a charging of oxide of iron in form of bricks of red ore or roll-cinder made up with lime. These bricks contain 25% of lime and 75% of roll-cinder or red ore. After the addition of the ferromanganese, the heat is tapped. The remaining slag is drawn out through the tap hole. The necessary repairs are made and the furnace is again at once charged. The repairs of the bottom ought not to take more than 20 minutes. The charging of the heat takes from 30 to 50 minutes. A heat is made in 6 to 7 hours with favorable conditions and easily charged material. Four heats can be made in 24 hours. In the year 1887 a great many heats were made with pig and ore. They gave very satisfactory results and the following table shows the influence of the ore addition on the quality of the steel:

CHARGE			STEEL			
Pig Iron.	Scrap.	Ore	C	Si	P	Mn
Lbs.	Lbs.	Lbs.	%	%	%	%
11000	4400	1430	0.204	0.03	0.018	0.125
11000	4400	1760	0.363	0.086	0.0356	0.277
11000	4400	2090	0.191	0.058	0.014	0.147
11000	4500	2420	0.368	0.030	0.024	0.280
11000	4400	2860	0.164	0.030	0.024	0.191
11000	4400	2640	0.109	0.023	0.017	0 270
11000	4400	2640	0.177	0 030	0.040	0.241
11000	4400	2200	0.273	0.023	0.032	0.248

The following gives a complete synopsis of a heat which can be taken as a sample.

The charge was:

11,000 lbs. pig iron from Anina.
2,640 " ore from Moravicza.
1,430 " limestone.
25 " ferromanganese.

An analysis of the pig iron showed as follows:

	%
C,	2.94
Mn,	2.74
Si,	2.10
P,	0.062
S,	0.015
Cu,	trace.

The red ore of the best quality from Moravicza had the following composition:

	%
SiO_2,	2.10
Al_2O_3,	1.49
CaO,	3.80
MgO,	0.75
P,	0.11
S,	trace.
Cu,	"
Mn,	0.57
Fe,	59.68

The resulting slag contained:

	%	
SiO_2,	25.20	
Al_2O_3,	2.13	
CaO,	38.85	
MgO,	11.77	
P,	0.37	
S,	trace.	
MnO,	11.95	
FeO,	11.45	[Fe, 8.84%].

The steel contained:

	%
Si,	0.067
Mn,	0.360
P,	0.0195
C,	0.231

The physical test made with forged steel showed the following results:

Ultimate strength, 49770 and 49039 lbs. per square inch.

Contraction of area, 71.3% and 66.6%.

Elongation for 8 inches, 25% and 21%.

The analysis from heats without addition of ore vary slightly, and an analysis of the slag is given below:

	%	
SiO_2,	10.28	
FeO,	14.98	[Fe, 11.5%.]

Al_2O_3,	8.45
CaO,	35.65
MgO,	4.15
MnO,	6.88
P,	0.51
S,	0.025

In general the loss is 10% of the charge. The amount of coal used per ton of ingot is 1210 lbs. This figure looks at first rather high compared with the results at other works where the coal for heating the scrap and ferromaganese is not included. At Resicza those materials are charged cold.

At the Brymbo Steel Works the charge for the basic open hearth consists of 80% of pig iron and 20% of scrap. The pig-iron analysis is as follows:

	%
C,	3.80
P,	0.12
S,	0.028
Si,	0.52
Mn,	2.05

Limestone is charged in sufficient quantities to make a basic slag right from the start. Scrap and pig iron follow. When melted down sufficiently, additions of ore and limestone are made at intervals for about five hours. The steel is very quiet in the moulds, and the total loss in the mill, including furnacing crops and cobbles, is only 8% of the weight of the ingots.

Any kind of pig iron may be used in the basic open hearth, provided it is low in silicon and sulphur. The 20-ton furnaces make 180 to 200 tons of ingots a week. The yield of the ingots from the weight of the pig iron, scrap and ferro used, inclusive of the iron reduced from the ore, is 93.5%.

The consumption of fuel, inclusive of Sundays, and that used for heating of furnaces that have been off, is 1240 lbs. per ton of ingots. An average analysis of the soft steel is as follows:

	%
C,	0.12
P,	0.030
S,	0.018
Mn,	0.40

At the works of the *Südbahn Gesellschaft* at Gratz, Austria, the basic open-hearth process was introduced in the year 1886.[1] The first basic heat was made on the 30th of August, 1886. Since May, 1887, nothing but basic steel has been made. The old open-hearth furnaces used for the acid process were not very well adapted for the basic process. Therefore three new furnaces were built with a capacity of 12 tons each. The regenerative chambers are vertical, and the air ports enter the furnace above the gas ports. The bottom and the walls are rammed with magnesite; the other parts of the furnace are built with the best Dinas bricks. At first chrome ore was used for a neutral layer between the acid and basic lining, but this was soon abandoned and the Dinas bricks now rest directly on the magnesite lining. The roof lasts 150 heats; the ports and walls from 350 to 400 heats. The time for a 12-ton heat is from 5 to 5½ hours. The charge consists of 26% of white pig iron and 74% of scrap. 4% spiegeleisen and 1% ferromanganese and ferrosilicon are used as recarbonizers.

The advantages gained by the basic process were greater then expected. The cost of maintenance of the furnace increased by about 50%, but the white pig iron used costs only $15.20 against $18 for the gray pig iron necessary for the acid process. The consumption of coal decreased from 47 lbs. per 100 lbs. of steel in the acid process to 30 lbs. in the basic. The coal used is the same and gives 5600 calories. The production per man and shift increased from 0.7 ton in the acid process to 1.24 tons in the basic process. The loss, about 5%, is the same. The quality of the steel improved a great deal. The basic steel stands a greater heat and more pressure under the rolls, and, therefore, allows a quicker rolling.

(1) See *Stahl und Eisen*, No. 1, 1889, p. 1, *et seq.* *Mittheilungen aus dem Grazer Südbahnwalzwerk*, by F. Moro.

Durability and Cost of a Magnesite Lining.

The durability of a magnesite lining ought to be unlimited, as the magnesite in the basic open hearth is only used as a neutral lining, and an addition of lime is used for the elimination of the phosphorus. Small holes in the bottom, which are unavoidable, are repaired after each heat. The durability of a magnesite bottom depends greatly on the care with which it is originally made. The magnesite bottom is specially adapted for the pig and ore process, which destroys any other lining through the formation of slag rich in oxide of iron. If an open hearth is lined out carefully with the best bricks, the bottom ought to last from 600 to 800 heats. The amount of magnesite used for repairs varies between 40 to 50 lbs. per ton of steel. If the price of magnesite brick is taken at $60, and of the calcined magnesite $36, at which price magnesite can be delivered at New York, the amount used for a 10-ton furnace is as follows:

For the lining, 12 tons of bricks,	$720
Calcined magnesite, 3 tons,	108
Total,	$828

Supposing the whole lining to be renewed after 800 heats, with an output of 8000 tons, the consumption of magnesite is as follows:

Lining,	$ 828
Repairs: $8000 \times 40 = 160$ tons,	5,760
Total,	$6,588

Or per ton of steel, 97 cents.

Against this sum the advantages will be briefly mentioned which are gained by the use of magnesite lining.

1. An elimination of 95% of the phosphorus in the charge is obtained without any difficulty.

2. The magnesite hearth allows an addition of 30% and more of ore.

3. The magnesite can be made into perfectly smooth and straight bricks.

4. The magnesite allows a direct contact with the acid lining material. This is not possible with any other basic lining.

5. The durability of the magnesite lining surpasses that of any other basic lining. A great deal of time and expense is saved by the avoiding of long and expensive repairs.

6. Of all known materials magnesite has the greatest resistance against the influence of basic slag and the oxides of metals.

7. Atmospheric influences will not injure the magnesite nor the bricks made from it, and they can be stored away without danger of spoiling.

8. The danger of using a partly decomposed, and for that reason not very durable, material which occurs sometimes with the use of dolomite is entirely done away with by the use of magnesite.

Against all these undisputed advantages the price of magnesite cannot be reckoned as too high.

In Styria, magnesite has been used for a long time; especially with great advantage for the lining of puddle furnaces and blast-furnace hearths. At Kladno, magnesite is used with very good results in the crucible of the blast furnaces which run on basic pig iron.

Analyses of Magnesite.

Carbonate of Magnesia from Eubœa.

	%
CaO and Fe_2O_3, . . .	1.50
MgO, ...	47.00
SiO_2, ...	0.50

Calcined Magnesite from Eubœa.

Volatile Matter.	CaO	MgO	SiO_2	$Fe_2O_3 + Al_2O_3$
1. Trace	2.67	94.50	0.73	0.560
2. Trace	0.83	95.36	1.46	0.746
3. 0.044	10.92	82.46	1.25	3.540

Carbonate of Magnesia from Styria.

Volatile Matter.	CaO	MgO	SiO_2	Fe_2O_3 and Al_2O_3	Used at
50.00	8.50	37.10	0.400	4.00	St. Etienne
52.00	0.50	35.00	0.500	11.00	l'Horme
47.87	2.50	42.58	2.75	4.30	Resicza

Styrian Magnesite from the Valley of the Mürz.

Carbonate of Magnesia.

	%
Insoluble Residues,	2.75
$FeCO_3$,	2.61
$CaCO_3$,	1.43
$MgCO_3$,	93.19
S,	0.021
P,	trace

Calcined Magnesia.

	%
SiO_2,	0.27
Fe_2O_3,	9.37
CaO,	0.31
MgO,	90.19

ANALYSES OF MAGNESITE BRICKS.

SiO_2	Fe_2O_3 and Al_2O_3	CaO	MgO		
%	%	%	%		
3.90	2.40	3.40	88.90	Eubœa, [Feb., 1886]	Bricks made by Michallet
8.63	8.40	0.50	81.23	Styria, [Nov., 1885]	Bricks made by Michallet
3.90	2.40	3.40	88.90	Eubœa	
7.65	4.20	1.15	82.10	Mitterndorf	
2.15	4.80	0.15	90.40	U. S., Rhode Island	
1.20	8.66	4.50	85.20	Styria, Valley of the Mürz	

At Resicza, dolomite is used for the bottom. The dolomite used comes from the quarries at Armönis. It is crystalline and very pure, and from a yellow to nearly white in color. Its analysis is given below:—

Raw Dolomite.

	%
SiO_2,	1.54
Al_2O_3 and FeO,	1.28
$CaCO_3$,	52.50
$MgCO_3$,	44.10

Calcined Dolomite.

	%
SiO_2,	0.70
Al_2O_3,	0.22
Fe_2O_3,	2.58
CaO,	57.55
MgO,	37.82
CO_2,	0.93

The chrome iron ore used at the first trials was of the following composition:

	%
Cr_2O_3,	38.95
FeO,	16.13
SiO_2,	8.30
Al_2O_3,	17.50
CaO,	2.20
MgO,	17.20

The Advantages of the Basic Open-Hearth Process.

The advantages of the basic open-hearth process are manifold, and first, the process is cheaper than the acid process. Less fuel is required, and cheaper raw materials can be used. The output can be increased and the basic bottom needs less repairs and lasts considerably longer than a sand bottom. Furthermore, the uniformity and good quality of the steel is assured without doubt, and is not

dependent on the raw materials. In the acid process it was necessary to use muckbars, if fire-box steel was made, in order to reach the necessary grade of high quality. These muckbars, 3300 lbs. for each heat, had to be charged warm. To-day in the basic process rail ends are the best material for the best quality of steel. The amount of phosphorus in the steel is never over 0.03%. Another advantage which is not to be underestimated is the possibility of using iron ore very freely instead of scrap.

The slag rich in iron and lime can be used to advantage in the blast furnace. At Resicza a comparison between the cost of the acid and the basic open-hearth process gave following results:

A saving of fuel in favor of the basic process of $1.444 per ton of steel.

A saving of raw materials in favor of the basic process of $3.908 per ton of steel.

The wages in the basic process were only 0.012 cent higher than in the acid process, and the cost for the basic addition, such as limestone, roll cinder, etc., etc,, were 0.208 cent higher per ton of steel. It was possible to save in fuel through charging the whole heat at once in a cold state and in getting a higher output from the furnaces. The use of all kinds of scrap such as sculls and pit scrap from the Bessemer works resulted in a great saving in the cost of raw materials.

Use of Basic Steel.

As the slag in the basic open-hearth process is highly basic, the amount of phosphorus and silicon in the steel is very low; and with a corresponding low amount of carbon the steel can be substituted for wrought iron. Nicked pieces, bent cold, show perfect fibre, which is so strongly developed that the steel does not break through. A test piece of an extra soft heat gave following test results:

Ultimate strength, 50623 lbs. per sq. inch.
Contraction, 66.8%.
Elongation, 31%. [8 inches between the marks.]

This extra soft material introduces some difficulties; in casting, a great amount of gases escape and cause heavy boiling. As soon as the steel begins to solidify it falls down and leaves a large hollow space. If large ingots are cast, this can be remedied by refilling the moulds as soon as the steel begins to fall. Small ingots are best cast from the bottom. The basic open-hearth steel gives excellent results if used for boiler plates. The easy welding qualities of it prevents any danger from blow-holes. 26 tests made with such boiler plates gave following results:

Ultimate strength, 42733 lbs. to 57733 lbs. per square inch.
Contraction of area, 60% to 75%.
Elongation, 18.5% to 31%. [Marks 8 inches apart.]

The basic open-hearth process is well adapted for the harder grades as well as the extra soft qualities. The ingots are perfectly homogeneous and solid, and the steel shows great toughness.

At Resicza tires and axles as well as castings are made from basic steel. Car-wheels, rolling-mill pinions, railroad frogs, and all kinds of machine castings are made with perfect success. An analysis of some hard steel with the corresponding physical tests is given below.

Steel used for tires had the following chemical composition and physical tests:

C	P	Si	Mn	Tensile Strength.	Contraction.	Elongation
%	%	%	%			
0.341	0.016	0.14	0.132	91861 lbs. per sq. inch	46.8	20
0.395	0.019	0.074	0.634	106223 lbs. per sq. inch	24.5	14

NOTES.

TO CHAPTER III.

[1] FIG. 67 shows the 12-ton converter at the basic steel works at Pottstown. The lining is rammed. The bottom is a flat dish bottom with inserted acid tuyeres.

[2] About 465 square inches of clear sectional area are calculated for one ton of iron for a basic converter.

[3] One of the best ways to construct this form is to make it in sections of wrought iron and bolt the separate sections together. It is very important

FIG. 67.

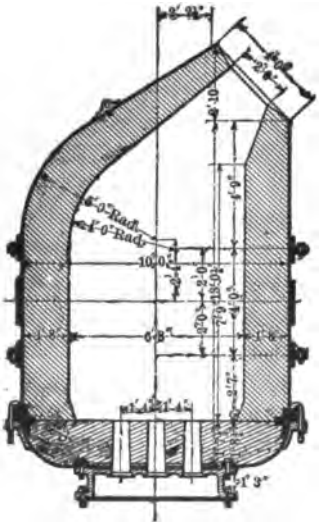

BASIC CONVERTER FOR 15 TONS CAPACITY.

FIG. 68.

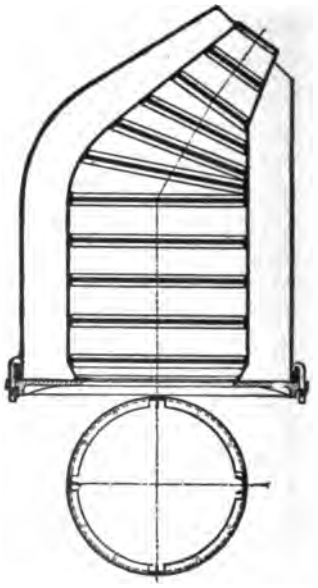

WROUGHT IRON FORMERS FOR RAMMED LINING.

that the outside of the form be smooth and that the sections fit exactly together. A smooth surface of the basic lining has a great deal to do with the long life of the same. A form constructed according to the above principles and used at Pottstown is shown in Fig. 68.

[4] A German furnace tried an automatic ramming machine, consisting of a shaft fixed in the vertical axis of the converter. From this shaft extend a num-

ber of horizontal arms, which carry rammers equally distributed over the whole length. The arms travel round and at the same time move slowly upwards. The whole apparatus is driven by a belt from an outside shaft.

[5] At Teplitz the 14-inch thick lining of an 8-ton converter has stood 235 heats and averages 200 heats. At Pottstown a maximum of 180 heats in a 10-ton converter with a 20-inch thick rammed lining was obtained.

[6] A very successful way to keep dolomite bricks stored away for a long time was introduced by Ernst Bertrand, manager of the Kladno Iron Works. He piled the bricks in wooden compartments, open in front and on top, and covered them about 8″ thick with slacked lime. This covering protected the bricks against all atmospheric influences and kept them for a long time.

[7] The most economical way to make a bottom is to ram it around false tuyeres. This method allows the changing of the tuyeres as they burn out, and enables us to keep the bottom pretty nearly always on the same level, by throwing basic concrete through the nose around the newly inserted tuyeres. Mr. Bruno Versen of Dortmund, Germany, invented a machine for ramming bottoms. This machine, described in *The Iron Age* of March 29, 1888, was originally designed for basic pin-bottoms, though the inventor has also modified it for ramming bottoms with separate tuyeres. The holes in a pin-bottom are formed by aid of a drill attachment.

[8] Teplitz makes up to 80 heats on a rammed bottom with acid tuyeres. Pottstown gets 65 heats out of the same kind of a bottom.

TO CHAPTER IV.

[9] PRACTICE shows that about 50% of the sulphur can be eliminated in the basic Bessemer process.

[10] At Kladno the use of direct metal is now entirely abandoned and a great deal better results are obtained with remelted pig iron. The iron should be brought to the basic converter as hot as possible. In the first part of the basic Bessemer process, there is always a lack of heat, caused by the comparative absence of silicon and by the large amount of lime. A cool metal causes great loss by ejection and lengthens the time of the blow. Therefore the use of direct metal for the basic process is not economical and a slightly overheated metal is to be recommended.

[11] The cupolas used at Pottstown have an inside diameter of 10 ft., with a 12-inch lining, and the height from the tuyeres to the charging-floor is 20 ft. The tuyeres are 4 ft. above the bottom of the hearth. The ordinary charge is: 4000 lbs. of pig iron, 750 lbs. of coke, and 100 lbs. of lime. 10 tons of pig iron are melted in 30 minutes.

[12] Kladno uses at the new basic Bessemer works open-hearth furnaces of a similar construction as the one at Teplitz. Three furnaces of 12 tons capacity are arranged in one group and furnish the metal for one converter.

[13] Teplitz uses for the softest grades of mild steel 1% of spiegeleisen with 12% of manganese, and 0.5% of ferromanganese with 70% of manganese; for rail steel 7% of spiegeleisen; and for steel castings 3% of spiegel, 0.5% of ferro, and 4% of white iron.

[14] Teplitz now uses a spoon for charging the scrap. This spoon is suspended from a trolley which runs on an overhead rail and can be brought

directly over the nose of the converter. The spoon has a handle about 12 ft. long, and can be tilted, when in position over the nose of the converter.

[15] Pottstown uses two big cylindrical shaft furnaces with four grates for coal fire. The dimensions of these furnaces are: Inside diameter of the shell, 9 ft. 4″; thickness of lining, 9″; height from grates to the charging-doors, 34 ft.; total height, 67 ft. Output of one furnace per day: 30 tons of burnt lime.

FIG. 69.

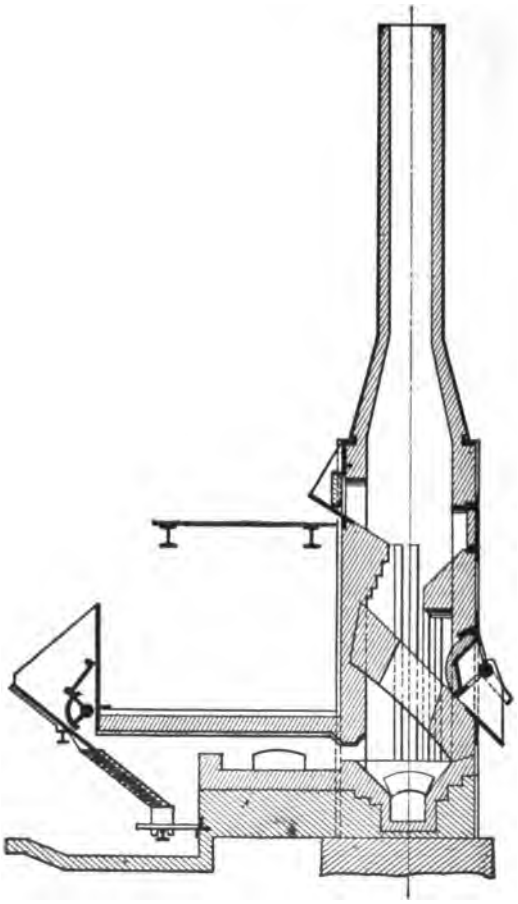

FURNACE FOR HEATING LIME AND SPIEGEL USED AT TEPLITZ, KLADNO, AND POTTSTOWN.

[16] Fig. 69 shows this furnace. Kladno and Pottstown use the same construction.

[17] For the formation of $Ca_4 P_2 O_9$, $2 \times 2.362 = 4.724$ parts by weight of lime are required.

[18] For the formation of:

$Ca_4 SiO_6 + Ca_4 P_2 O_9$, it requires $10.48s - 1.336\,m + 4.724\,p$.

[19] If a tetrabasic calcium phosphate is formed, it is not necessary to pour off the slag before the addition of the recarbonizer, because the iron carbide of the latter will not reduce the phosphorus out of a tetrabasic calcium phosphate.

[20] Pottstown uses in the basic Bessemer works two vertical blowing engines, built by the Southwark Foundry and Machine Co. Steam cylinder 42″; air cylinder 54″; and stroke 48.″ The engines make generally 50 revolutions a minute and a 10-ton heat is blown in about 12 minutes with 28 lbs. of blast pressure.

[21] Fig. 70 shows an air valve used at Teplitz. This valve is forged out of one piece of the softest steel and tightened with a leather ring. The valve is light, very strong, and safe, as it has no separate parts to become loose.

FIG. 70.

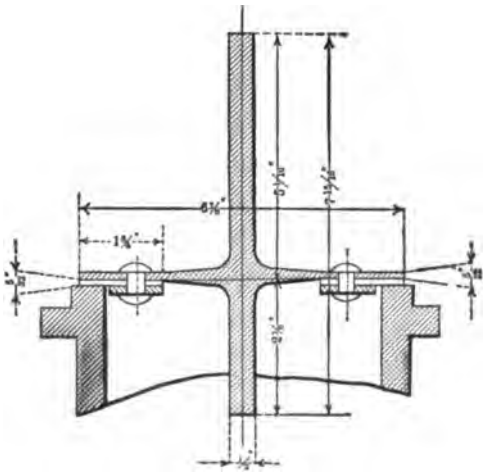

VALVE USED AT TEPLITZ.

TO CHAPTER V.

[22] IN Teplitz, if rail steel is made, 40 to 42 heats are blown in 24 hours, and the output is only limited by the capacity of the remelting furnaces. If soft steel is made, 28 to 30 heats are blown, as the pouring of soft steel requires more time and the steel is kept standing in the ladle before pouring for 5 to 10 minutes to obtain a uniform material. Rotheerde makes 38 heats in 24 hours.

The time for changing a bottom was reduced at Pottstown to 30 minutes, and there is no reason, why the changing of a basic bottom cannot be performed in the same time as in the acid process, say from 10 to 15 minutes.

[23] The converters in the basic steel works at Pottstown, originally constructed for a capacity of 10 tons, were enlarged to a capacity of 15 tons by making the lower part of the converter straight instead of curved.

[24] With iron slightly overheated and a well heated lime, it is possible to bring the loss in the converter down to 9%, as an average for a long run.

[25] An arrangement for pouring small ingots, patented by A. Kurzwernhardt and Ernst Bertrand is described in *Stahl und Eisen*, No. 7, pp. 443 *et seq.*, 1887. This method makes it possible to cast small ingots, from 4″ square upwards, perfectly compact and without any lost head. The method is in practical use at Teplitz and Kladno, and the ingots are used in the rolling mills instead of billets.

[26] This weighing apparatus, never used outside of Kladno, is even there abandoned.

If ingots are required to be cast to a correct weight, it is a great deal easier and just as reliable to cast them to a certain length. For this purpose the moulds are marked on the inside with chalk according to the ingot weight required. This requires only a table with the length of the ingot corresponding to the different weights. In this way it is possible to get a correct ingot weight within a margin of 15 lbs.

TO CHAPTER VII.

[27] THE Basic Steel Works at Athus are built after the plans of A. A. Holley. The new works at Kladno have an arrangement similar to the one at Peine, with the only difference that, instead of cupolas, gas furnaces are used for remelting the pig iron. Six furnaces are connected through runners with the three converters.

The Basic Bessemer Works of the Pottstown Iron Co., at Pottstown, Pa.

The steel plant of the Pottstown Iron Co., was erected in the year 1885 and the first heat was blown in July, 1886.

The pig iron, as it came from the blast furnace was very carefully sampled and analyzed and the analysis of each separate pile kept on record. It was, therefore, very easy to get a mixture of a certain chemical constitution in the cupola. In this way a little irregularity of the blast furnace does no harm, as the poorer grades of iron can be mixed in small quantities with the good ones. This arrangement requires but little more room in the yard and the extra work of analyzing each blast-furnace tap is fully repaid by the advantage of the entire control over the cupola charge, which can be mixed suitable to demands and circumstances. In Pottstown, pig iron with 1.7% of phosphorus, 0.3% of sulphur, and 1% of silicon could be used successfully in the charge. The analysis of the cupola mixture was generally: phosphorus, 2.6%; sulphur, 0.08%: silicon, 0.70%. The pig iron is charged in the cupola [described in note [11]] and if possible 6 to 10% of steel scrap is added. Coke is generally used for fuel and for 6 parts of iron one part of coke is charged. The blast pressure is from 6 to 8 ounces. For a short time the works were compelled to use anthracite coal instead of coke. The charge was changed to 7500 lbs. of iron to 1250 lbs. of coal and 600 lbs. of lime; the blast pressure was raised to 12 ounces.

Ten tons of iron are melted in 30 minutes and the iron is tapped into a ladle mounted on a carriage. At first the iron tapped from the cupola was over-

heated in a Siemens regenerative gas furnace, and the ladle brought to the charging-floor of the latter by a 25-ton hoist. The operation of the overheating proved so cumbersome and took so much time, without giving the anticipated results, that it was abandoned and the iron is now taken direct from the cupola to the converter. The ladle carriage stands during the tapping on a scale and the iron is carefully weighed. This weighing enables one to get a correct figure of the cupola loss. This loss varied between 2 to 2.5% of the pig iron weight.

The iron is brought from the cupolas direct to the converters, which are arranged in a straight line. In front of the three converters are situated two hydraulic cranes. The ladle is picked up by this crane and the contents emptied into the converter, which has been before charged with red hot lime. The lime is charged by a small hydraulic crane situated between the converters on the upper platform. After the iron is charged, the converter is turned up and the blow commences. The finish of the decarbonization period is watched by a spectroscope. The after-blow is regulated by the revolutions of the blowing engines. The revolutions are counted by means of an electric counter on the pulpit. Near to the spectroscope is an electric switch, so that at the moment the manganese lines disappear in the spectrum, the current is closed and the counting commences. The converter is turned down after the required number of revolutions are blown. The ferro is put in the converter in a red hot state by means of a spoon which, as soon as it reaches the middle of the bath, is turned around and emptied of its contents. The metal is now poured into a ladle hanging on the transfer crane. Only half of the charge is poured out at first and then the spiegel is added. This causes a very heavy boiling and an overflowing of the slag. After the boiling ceases a little, the remainder of the heat is poured in the ladle. Behind the ladle the slag car stands on a track. This is a flat car with a brick bottom and a cast iron box on its top. The steel ladle has a large spout which reaches over it into the slag car, so that all the slag flows through this spout into the slag car. The slag car is removed after each heat to a side track where it stands long enough to cool the slag off. When the slag is sufficiently cool, the box is lifted up and the car with the slag cake on it is hauled to the slag dump.

In the meantime the transfer crane has the ladle, filled with steel, raised up and swung around over the casting ladle of the locomotive ladle crane. The steel is poured over and gets thoroughly mixed. The locomotive crane runs on a straight track on one side of the casting-pit. The steel is poured into the moulds in the ordinary way. The tops of the ingots are covered with heavy cast-iron covers which prevent the steel from rising and make the ingot top solid. Only four to five moulds are cast at each heat. The ingots are stripped, and if they stick in the moulds they are put in an ingot extractor where they are pushed out by a hydraulic ram. The ingots after they are weighed are put at once in Hainsworth hole heating furnaces. The hot moulds are removed from the casting house, to a side track outside the building, where they cool off and can be inspected. This arrangement keeps the casting house free and makes the work a good deal easier.

The pig iron changes somewhat its chemical composition in the cupola and takes up sulphur from the coke. This sulphur is again reduced in the converter as shown in the following analysis:

Heat No.	Sulphur in the	
	Cupola Tap.	Steel.
	%	%
337	0.173	0.049
338	0.153	0.036
490	0.145	0.044
491	0.129	0.063

The following analysis shows to what extent the dephosphorization was accomplished at Pottstown.

				Analysis of the Steel.		
Heat No.	Lime.	Spiegel.	Ferro.	C	P	Mn
	%	%	%	%	%	%
1406	19	1.5	0.5	0.09	0.026	0.3276
1407	19	1.5	0.5	0.09	0.033	0.443
1408	19	1.5	0.5	0.11	0.042	0.364
1409	18	1.5	....	0.09	0.033	0.317

The relations between the phosphorus and silicon of the pig iron and the same in the slag are shown as follows:

	Pig Iron.		Slag.	
Heat No.	Si	P	P_2O_5	SiO_2
%	%	%	%	%
2392	0.579	2.362	26.219	3 55
2393	0.485	2.178	24.651	3.25
2394	0.420	2.167	25.258	3.85
2395	0.569	2.164	25.209	3.65
2368	0.761	2.577	24.940	7.00
2369	0.826	2.572	24.686	8.25

The following tables give the analysis of some of the materials used for the basic process at Pottstown:

Ferromanganese.			Spiegeleisen.		
Si	P	Mn	Si	P	Mn
%	%	%	%	%	%
0.437	0.194	79.975	0.453	0.168	10.164
0.539	0.203	79.130	....	....	....

Limestone used as basic addition:

	%
Insoluble residue,	1.5
Fe_2O_3 and Al_2O_3,	1.225
CaO,	93.8
MgO,	3.3176

The basic bricks made at the works showed the following composition:

Insoluble Residue,	1.192
Fe_2O_3 and Al_2O_3,	3.04
MgO,	1.512
CaO,	95.21

INDEX.

PAGE

Acid tuyeres used with basic bottom... 75
After-blow 25, 104
Air-valve used at Teplitz..... 217
Alexandrowsky furnace for calcining dolomite..... 35
Alkaline carbonates as dephosphorizers 17
Alumina used in manufacture of basic bricks..... 50
Althans's investigations on sintering material..... 53
André's use of basic lined cupola..... 27
Annular kiln for burning basic bricks.. 37
Automatic rammer..... 214

Baryta used in manufacture of basic bricks..... 50
Basic Bessemer plants, list of..... 186
Basic Bessemer Process, duration of heat..... 118
Basic Bessemer process in practical operation..... 116
Basic Bessemer works, general arrangement of..... 162
Basic bricks, manufacture of..... 34, 36
Basic bricks, patents for..... 22
Basic bricks, shrinkage of..... 38
Basic fluxes 25, 154
Basic lining, durability of. 68
Basic lining, materials used for... 28, 31, 32
Basic lining not adapted for blast furnace..... 4
Basic lining proposed by Bell..... 7
Basic lining proposed by Krupp..... 7
Basic lining proposed by Tunner..... 20
Basic materials, analyses of..... 138
Basic materials used in the open hearth 178
Basic open hearth, dephosphorization in 194
Basic open-hearth furnace, construction of..... 195
Basic open-hearth process, advantages of..... 211
Basic open-hearth process, mode of operation..... 178, 200
Basic open-hearth works at Resicza 199, 202
Basicity of slag..... 137

PAGE

Beauxite used in manufacture of basic bricks..... 50
Bell's dephosphorization process..... 16
Bell's use of basic lining..... 7
Binding ingredients used in making basic bricks..... 24
Blast, drying and heating of..... 111
Blast required for basic Bessemer process..... 105
Blast furnace, dephosphorization in.... 3
Blowing engines, dimensions of..... 107
Brick lining for converters..... 66
Brymbo steel works..... 205

Carbon, oxidizability of. 149
Carbon lining in Bessemer converter.. 52
Catalan process, dephosphorization in. 5
Cely's method for desulphurizing pig iron..... 193
Chemical phenomena connected with dephosphorization 13
Chemical reactions of the basic Bessemer process 135
Chrome ore in basic open-hearth construction 198, 211
Cinder, analysis of..... 142
Closson's method of preparing magnesia.. 43
Converter, capacity of, in basic Bessemer process..... 118
Converter, lining of..... 64
Converter bottoms, construction of.. 74, 76
Converter construction..... 27
Cooling of converter..... 87
Cost of basic Bessemer process..... 182
Cost of magnesite lining in open-hearth process 207
Cranes..... 83, 124, 126
Croll's method for decomposing slag.. 175
Cupolas, basic lined..... 177
Cyanogen proposed as a fluxing ingredient..... 4

Daelen's changeable converter..... 84
Daelen's crane..... 128
Daelen on use of iron-oxide lining..... 21

PAGE

Dehydration of tar 57
Dephosphorization by alkaline carbonates. 17
Dephosphorization in Krupp's process. 11
Dephosphorization in the blast furnace. 3
Dephosphorization in the Catalan process..... 5
Dephosphorization in the liquation process..... 19
Dephosphorization in the open hearth 177, 194
Dephosphorization in the puddling process... 19
Dephosphorization in the refining process..... 6
Desulphurization of pig iron..... 191
Dolomite, analyses of..... 40, 211
Dolomite, burning of, for basic bricks. 34
Dolomite, changes of, in burning..... 41
Dolomite lining 5, 21
Dolomite used in the basic Bessemer process 103
Drown's experiments with alkaline carbonates 18
Durability of basic bottoms..... 78
Durability of basic lining..... 68
Durability of magnesite lining in open hearth..... 208

EATON'S experiments with carbonate of soda..... 17
Economical results of basic Bessemer process..... 181
Ehrenwerth's calculations of heat evolved in converter..... 157
Ehrenwerth's formulas for quantity of lime needed..... 102
Equalizing canal..... 133
Equalizing pits..... 130
Erimus converter..... 73
Erimus works, arrangement of 165
Eschellmann's method of preparing magnesia..... 46

FERROMANGANESE, analysis of..... 221
Ferromanganese as a recarbonizer..... 95
Ferrosilicon..... 97, 98
Fertilizers, preparation of basic slags for... 174
Finkener's investigations of chemical reactions..... 136
Finkener on the oxidizability of carbon. 149
Finkener on the oxidizability of phosphorus..... 152
Finkener on the oxidizability of sulphur..... 153
Flame in basic Bessemer process, character of..... 117
Fluorspar not available as a flux..... 4

PAGE

Fluxes, analyses of..... 138
Fluxes, used in Krupp's process..... 11
Frank's patent for decomposing slag... 176
Fritting materials..... 23

GARNIER'S experiments on open-hearth process... 179
German patent laws..... 181
Gjers's soaking pits..... 130
Göransson's formula for blast required. 112
Gratz basic open-hearth works 206

HARMET'S proposed division of the process..... 132
Heat, evolution of, in the basic Bessemer process 156
Heating furnaces at Kladno, at Pottstown, and at Teplitz..... 216
Henderson converter and trunnion ring 83, 84
Holley's basic Bessemer plant..... 163
Holley's converter..... 80
Hörde, experiments at 137, 139
Hörde, method of making basic bricks at..... 34
Hörde practice with tar bricks. 62

ILSEDE works, cost of production at.... 184
Ingots..... 121, 128
Iron, analyses of, 14, 92, 135, 136, 138, 139, 140, 141, 180, 201, 204, 206, 220.
Iron oxide used in the basic Bessemer process..... 103
Iron oxide used as lining..... 17, 21, 51
Iron, oxidizability of..... 146

JACOBI'S method of dephosphorizing ores..... 1
Justice's carriage..... 82

KILNS for burning basic brick..... 36
Krupp's process..... 8

LADLES for casting ingots..... 119
Lencauchez's method for making basic bricks..... 29
Lime kiln at Peine..... 99
Lime used in manufacture of basic bricks..... 47
Limestone, analysis of..... 47
Limestone, amount used in basic Bessemer process..... 98, 101
Limestone as flux..... 25
Liquation process, behavior of phosphorus in..... 19
Luxemburg works, cost of production at 184

MAGNESIA, not available for basic bricks..... 46
Magnesia bricks..... 42, 43
Magnesite, analyses of..... 42, 209
Magnesite as a basic lining 20

PAGE

Magnesite bottoms in open-hearth furnace. 194
Magnesite bricks, analyses of..... 210
Magnesite bricks, manufacture of..... 195
Magnesite lining in open-hearth furnace, cost of..... 207
Manganese, oxidizability of..... 148
Manganese-silicon..... 97
Melaun's bottom..... 86
Melaun's method of making tar bricks. 60
Metallic lining for Bessemer converter 51
Middlesbrough, investigations at..... 140
Middlesbrough, method of making basic bricks at..... 34
Milan's sectional converter..... 79
Mortar used with tar bricks..... 60
Moulds used in manufacture of tar bricks..... 59

NARJES's use of slag lining..... 8

OPEN hearth, dephosphorization in 177, 194
Ores, methods of dephosphorizing..... 1
Osann's carbon lining 52
Over-blow..... 96
Oxidation phenomena in converter 145
Oxidizability of carbon 149
Oxidizability of iron..... 146
Oxidizability of manganese..... 148
Oxidizability of phosphorus..... 151
Oxidizability of silicon..... 147
Oxidizability of sulphur..... 153

PEINE converter..... 79
Peine lime-kiln..... 99
Peine locomotive ladle crane..... 126
Peine remelting furnace..... 93
Peine steel works, arrangement of..... 169
Phosphate of lime in the manufacture of basic bricks..... 48
Phosphorus, oxidizability of 151
Physical reactions of the basic Bessemer process 156
Pig iron, desulphurization of..... 191
Pig used in basic Bessemer process.... 90
Pin bottoms..... 74, 215
Plasticity of basic brick..... 55
Plasticity of materials used for basic lining..... 28
Pottstown steel works..... 214, 215
Pouring, arrangements for 119
Puddling process, behavior of phosphorus in..... 19

RAMDOHR's method of preparing magnesia..... 45
Rammed lining..... 67
Recarbonizers..... 95
Refining process, dephosphorization in 6
Remelting furnace 93

PAGE

Resicza basic open-hearth works..... 199
Rhein steel works, converter at..... 65
Rhein steel works, experiments at. 136, 143
Richards's investigations at Middlesbrough..... 140
Rollet's method for desulphurizing pig iron..... 192
Rümpler's method for preparing magnesia..... 45

SCHEIBLER's method for preparing magnesia 44
Scheibler's method for treating slag.. 175
Sectional construction of converter.... 27
Silicon, oxidizability of..... 147
Sintering materials..... 52
Slag, analyses of, 11, 14, 137, 138, 139, 141, 172, 173, 174, 205, 220.
Slag, influence of, on basic lining..... 71
Slag, utilization of..... 172
Snelus's basic lined cupola..... 27
Soaking pits..... 130
Spiegeleisen, analysis of..... 221
Spiegeleisen as a recarbonizer..... 95
Stability of chemical compounds..... 144
Stead's investigations..... 141
Steel, analysis of..... 203, 205, 206, 213
Strontia used in manufacture of basic bricks..... 49
Sulphur, oxidizability of..... 153

TAR as a binding material..... 24
Tar as a sintering material..... 54, 56
Tar bricks, manufacture of..... 58, 60
Tar, substitutes for, in manufacture of basic bricks..... 61
Tellerofen, construction of..... 9
Teplitz steel works..... 215
Thomas's first patent for basic lining.. 30
Thomas's second patent for basic lining 32
Thomas's patent for basic bricks 21
Thomas's patent for decomposing slag. 176
Thomas's proposed use of iron oxide in place of lime..... 103
Thomas's use of limestone as a flux... 25
Tunner's recommendation of basic lining 20

VANADIUM in the slag..... 176
WASUM's experiments of durability of lining..... 69
Water-cooling of converter..... 88
Water-glass, use of, in basic lining.... 31
Wedding's proposed iron oxide lining..... 17, 21
Weighing apparatus..... 121, 218
Witkowitz converter..... 73, 77
Witkowitz, experiments at..... 140

YIELD of basic Bessemer plants..... 189

Mining, Tunneling and Quarrying

MACHINERY.

ROCK DRILLS. AIR COMPRESSORS.

COAL CUTTING MACHINES.

STONE CHANNELING MACHINES. QUARRY BARS. STANDARD GADDERS. PLUG AND FEATHER DRILLS. ELECTRIC BLASTING BATTERIES. FUSES, WIRE, ETC. DIAMOND PROSPECTING CORE DRILLS.

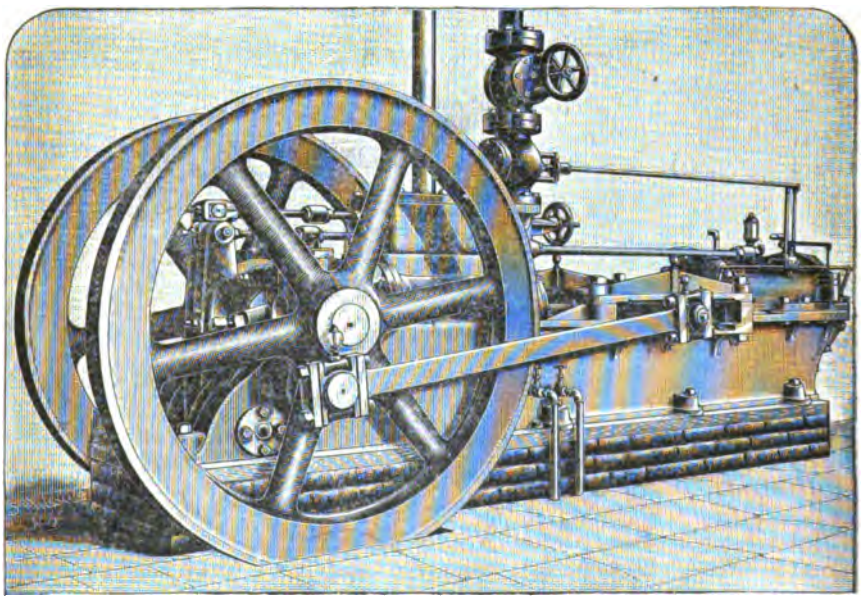

Sergeant's Piston Inlet Cold-Air Compressor.

BOILERS, PUMPS, STEAM ENGINES.

STEAM HOISTING ENGINES FOR MINES AND QUARRIES.

Ingersoll-Sergeant Rock Drill Company,

Manufacturers of the Celebrated Ingersoll and Sergeant Mining and Quarrying Machinery.

10 PARK PLACE, NEW YORK.

THE ENGINEERING AND MINING JOURNAL

RICHARD P. ROTHWELL, C.E., M.E., EDITOR.

ROSSITER W. RAYMOND, PH.D., M.E., SPECIAL CONTRIBUTOR.

CONTENTS.

The latest and best of everything of interest in engineering, mining and metallurgy, presented in attractive form, with frequent illustrations.

Accurate coal, iron, metal, chemical and building material market and stock reports from all parts of the country. Specially prepared articles relating to imports and exports into and from all the leading markets of the world.

26th Year.

A Credit to this Country.

(From the Rand-McNally's Banker's Monthly).

The ENGINEERING AND MINING JOURNAL, New York; Richard P. Rothwell, C.E., M.E., editor; Rossiter W. Raymond, Ph.D., M.E., special contributor. Every man who has a family and sons coming along, and desiring an additional help to lift their minds above the mere wretched commonplace of life, should at least put this splendid periodical in their way. The scientific man and mine-owner, and the civil engineer, of course, will have the ENGINEERING AND MINING JOURNAL. It is a credit to this country.

ADVERTISING.

In no other publication can advertisers reach the varied interests represented by the ENGINEERING AND MINING JOURNAL. Many of our most successful manufacturers have advertised in its columns *continuously* for from 10 to 25 years.

This is a fact more eloquent than words.

Advertisers are well satisfied with the returns on their investments, and continue to use the pages of the ENGINEERING AND MINING JOURNAL.

SUBSCRIPTION, INCLUDING POSTAGE:

Weekly Edition (which includes the Export Edition), for the United States, Mexico and Canada, $4.00 per annum; $2.25 for six months; all other countries in the postal union, $5.00.

Monthly Export Edition, all countries, $2 50 gold value per annum.

The SCIENTIFIC PUBLISHING COMPANY,

Publishers and Booksellers,

R. P. ROTHWELL, Pres. and Gen'l Manager.
SOPHIA BRAEUNLICH, Sec. and Treas.

27 Park Place, New York.

IMPROVED HOISTING ENGINES,

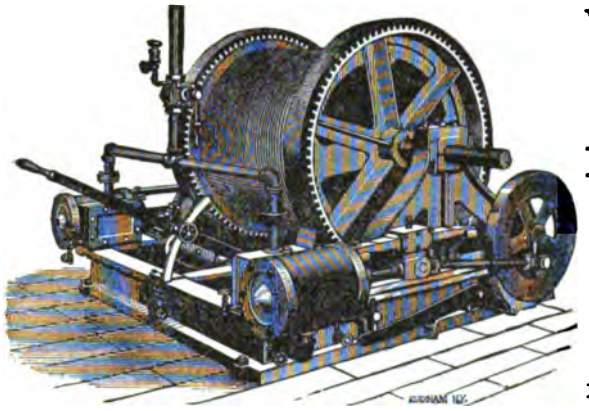

With Reversible Link Motion or Patent Friction Drum.

BLAST FURNACE HOISTS.

300 Styles and Sizes.
Over 6,500 in use.
Manufactured by the

LIDGERWOOD M'F'G CO.,

96 LIBERTY ST., NEW YORK.

34 and 36 W. Monroe St., Chicago. **197-203 Congress St., Boston.**
No. 1 and 7 North First St., Portland, Ore.

SEND FOR CATALOGUE.

NEW YORK BELTING & PACKING CO.

J. H. CHEEVER, Treasurer.
J. D. CHEEVER, Dep'y Treas.

15 PARK ROW, NEW YORK.

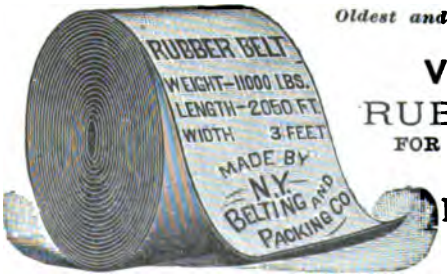

Oldest and Largest Manufacturers in the United States of

VULCANIZED RUBBER FABRICS

FOR MECHANICAL PURPOSES.

EXTRA RUBBER MACHINE BELTING.

With Smooth Metallic Surface.

EXTRA RUBBER AND COTTON HOSE,

Circular Woven, Seamless, Antiseptic, Rubber Lined "Cable" Hose and "Test" Hose.

SOLID VULCANITE

EMERY WHEELS.

SALESROOMS: Boston, Philadelphia, Chicago, St. Louis, Detroit, Minneapolis, Cleveland, San Francisco, Denver, Grand Rapids, Atlanta, Kansas City, New Orleans.

THE UNANIMOUS OPINION

OF THE BEST CRITICAL JUDGMENT OF THE WORLD IS THAT THIS WORK IS THE

MASTERPIECE OF LITERARY, ARTISTIC AND TYPOGRAPHICAL ART.

GEMS

AND

PRECIOUS STONES

OF

NORTH AMERICA

A POPULAR DESCRIPTION

OF THEIR OCCURRENCE, VALUE, HISTORY, ARCHÆOLOGY, AND OF THE COLLECTIONS IN WHICH THEY EXIST, ALSO A CHAPTER ON PEARLS AND ON REMARKABLE FOREIGN GEMS OWNED IN THE UNITED STATES . . . .

ILLUSTRATED

WITH EIGHT COLORED PLATES AND NUMEROUS MINOR ENGRAVINGS

BY

GEORGE FREDERIC KUNZ,

Gem Expert with Messrs. Tiffany & Co., special agent of the United States Geological Survey and of the Eleventh United States Census, member of the Mineralogical Society of Great Britain and Ireland, the Imperial Mineralogical Society of St. Petersburg, the Société Française de Minéralogie, etc.

Price, - - $10.00

SCIENTIFIC PUBLISHING COMPANY,

27 PARK PLACE, NEW YORK.

THE

Brandis Manufacturing Company,

55 FULTON STREET, NEW YORK, N. Y.

Extract from U. S. Government Advertiser, September 8, 1887.

To a general invitation issued by the U. S. Corps of Engineers, Willets Point, to instrument makers, to submit specimens, ELEVEN DIFFERENT MAKERS responded. A careful list, made by three experts detailed for the purpose, resulted in the selection of those made by Mr. F. E. BRANDIS, 55 Fulton Street, New York, ON ACCOUNT OF THEIR LIGHTNESS, EXTREME ACCURACY AND EXCELLENT WORKMANSHIP.

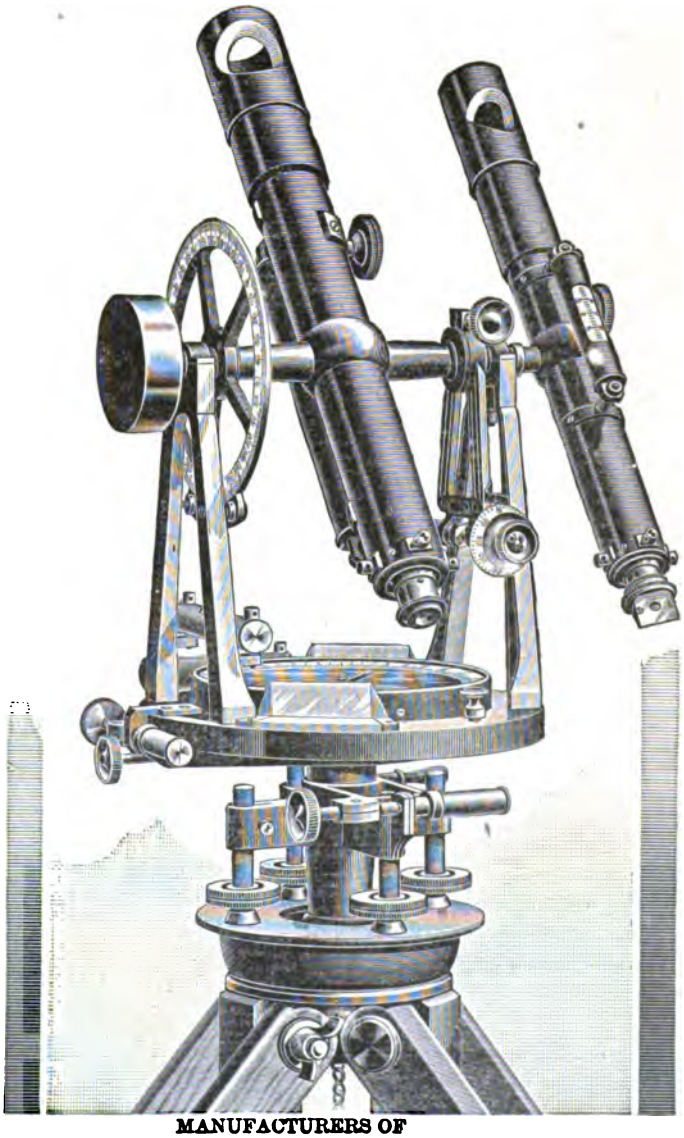

MANUFACTURERS OF

ENGINEERING & ASTRONOMICAL INSTRUMENTS

CATALOGUES SENT ON APPLICATION.

MODERN AMERICAN

METHODS OF COPPER SMELTING

By Dr. E. D. PETERS.

Large 8vo, 342 pp., Cloth gilt. Illustrated. Second edition.

Cloth gilt, - $4.00. Half Morocco, - $5.00.

The volume will be valuable to the student.—*American Journal of Science.*

This very handsome and well printed treatise is beyond question the most complete treatise on copper smelting in existence. It is full of detailed statements of cost, and bears on every page the stamp of a thoroughly practical work.—*Engineering News.*

The work is essentially a practical one, and should, therefore, have a special value for British copper smelters who have an excellent opportunity of studying the processes that are being adopted by their North American competitors.—*Mining Journal* (London).

Dr. Edward D. Peters has introduced a work that is well-nigh a model of its kind. It contains much that is not found in any single work published, and that much is of value to the practical man in metallurgical work, because it is put so plainly that he who runs may read.—*Mining Industry* (Denver).

COPPER SMELTING:

ITS HISTORY AND PROCESSES.

BY HENRY HUSSEY VIVIAN, M.P.

This extremely valuable and very scarce work is the reprint of a lecture delivered at Swansea, in the Theatre of the Royal Institution of South Wales, on December 20th, 1880.

Within the same cover there is given "A History of Baltimore Copper Works at Canton, Maryland," also "Sketches of the Forrest Copper Works and the Haford Copper Works, Swansea, South Wales," which are Illustrated by Full-Page Pictures of the Works.

Scarce, Price, - - - - - $2.00.

SCIENTIFIC PUBLISHING COMPANY,

PUBLISHERS,

27 PARK PLACE, NEW YORK.

"Lucigen"

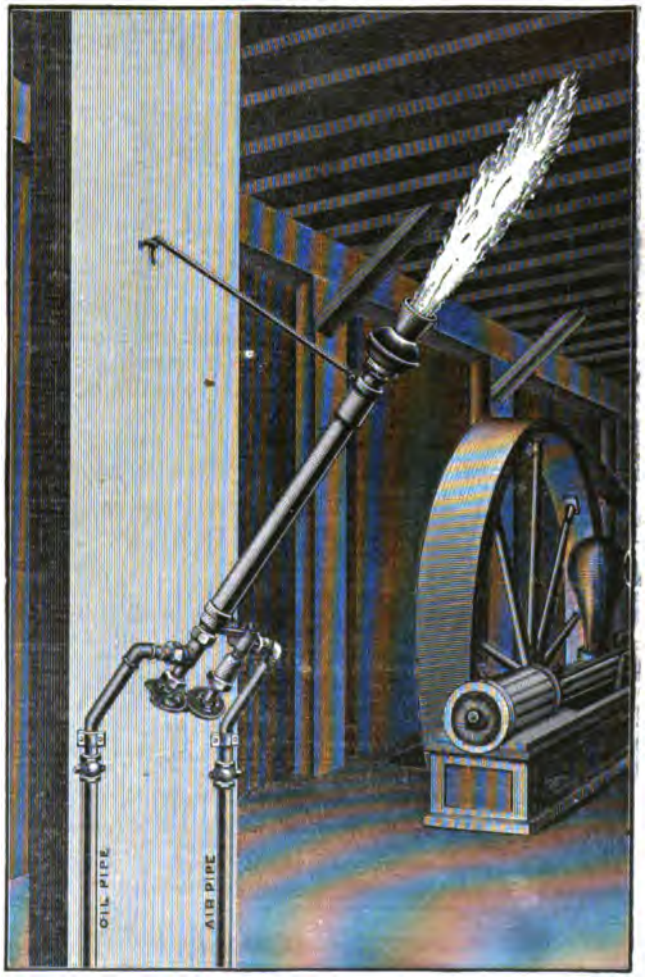

BURNS CRUDE OR REFINED PETROLEUM,

SPRAYED BY COMPRESSED AIR.

Portable Lamps or Fixed Burners of 250 to 3,000 Candle Power in Stock.

INDUSTRIAL LIGHT COMPANY,

TEMPLE COURT, NEW YORK.

The Lixiviation of Silver Ores

WITH

Hyposulphite Solutions.

BY CARL A. STETEFELDT.

In Cloth, Illustrated. Price, - - $5.00.

Notices and Opinions.

"We can unreservedly recommend this work."—*Mexican Financier.*

PROF. SAFFORD, of the Vanderbilt University, writes: "Mr. Stetefeldt has given us a most useful work and one well up with the times."

PROF. COMSTOCK, of the University of Illinois, says: "There is a crying need of more works like it upon cognate subjects."

"It is in every respect a model of what such a book should be and is another illustration of German thoroughness."—*Journal of Analytical Chemistry.*

PROF. EGLESTON, of the Columbia College School of Mines, writes: "The book is a very valuable contribution to our knowledge of teaching, and I shall take great pleasure in recommending it to students, metallurgists and others."

"It is particularly valuable for its descriptions of the chemistry of the process, in which the older works are woefully deficient. It gives all the facts, apparently which one engaged in milling ore by the process should know."—*Mining Industry.*

PROF. HOFMAN, of the Dakota School of Mines, writes: "I have no hesitation in saying that the 'Lixiviation of Silver Ores' is the best existing work upon the subject, and will, undoubtedly become THE text-book for specialists in this interesting field."

PROF. SHARPLESS, of the Houghton Mining School, writes: "One who has occasion to read up the recent advances of lixiviation processes will appreciate the work which has been done by the author in compiling and in original research, and the profession should extend its thanks to Mr. Stetefeldt for his successful effort 'to fill up a gap in metallurgical literature.'"

PROF. BRUNO KERL, in a review of this book which he prepared for the *Berg- und Huettenmaennische Zeitung*, of Berlin, says: "All the defects of the old process have been overcome by the Russell process as described by Mr. Stetenfeldt in his book, which fills a real gap in metallurgical literature. . . . Its translation into German would be a very desirable addition to our literature."

JOHN HEARD, JR., Mining Engineer, writes:

"This treatise is the *most valuable—indeed the only valuable—one on lixiviation.* The amount of careful, intelligent, original and compiled research is enormous; the tables and drawings must be invaluable and, indeed, indispensable to any manager of a lixiviation plant, and the figures there recorded are more convincing arguments as to the value and range of lixiviation as a method of extracting silver from certain ores than the author's dogmatic deductions.

SCIENTIFIC PUBLISHING COMPANY,

27 PARK PLACE, NEW YORK.

BERWIND-WHITE COAL MINING COMPANY,

MINERS AND SHIPPERS OF THE

EUREKA

BITUMINOUS COAL

55 BROADWAY, NEW YORK,

BULLITT BUILDING, 139 SOUTH FOURTH ST., PHILADELPHIA,

19 CONGRESS ST., BOSTON, MASS.

An Unexcelled Fuel for Steamships and Locomotives, Manufactories, Rolling Mills, Forges, Glass Works, Brick and Lime Burning, Coke, and for the Manufacture of Steel, Iron, etc.

SHIPPING WHARVES:

PHILADELPHIA, Greenwich Point.

NEW YORK, Eureka Pier, Harsimus (foot 6th St.), Jersey City, N. J.

BALTIMORE, Canton Piers.

MINING ACCIDENTS
AND
THEIR PREVENTION.

BY SIR FREDERICK AUGUSTUS ABEL.

With Discussion by Leading Experts. Also, the United States, British and Prussian Laws relating to the Working of Coal Mines.

Price, - - - $4.00 in Cloth.

CONTENTS:

Mining Accidents. By Sir Frederick A. Abel. With discussion by President Bruce, of the British Institute of Civil Engineers; and Prof. Arnold Lupton, C. Tylden Wright, Emerson Bainbridge, William Morgans, Sydney F. Walker, Col. Paget Mosley, Henry Hall, Col. J. D. Shakespear, Stephen Humble, Sir George Elliot, Sir Warington Smyth, A. R. Sawyer, A. Giles, R. Bedlington, Edward Combes, George Seymour, Henry Harries, William Cochrane, James Ashworth, J. B. Atkinson, W. N. Atkinson, Bennett H. Brough, T. Foster Brown, S. B. Coxon, C. Le Neve Foster, W. Galloway, Max Georgi, W. S. Gresley, J. A. Longdon, A. R. Sennett, M. H. N. Story Maskelyne, Arthur Sopwith, A. L. Steavenson, A. H. Stokes and others.

List of safety appliances, with description of detachment of mineral from its bed, carriage of mineral to the surface, difficulties attendant on the presence of gases, etc. Safety lamps (oil and spirit), safety lamps (electric) and other appliances.

The Mining Laws of Colorado, Illinois, Indiana, Iowa, Kansas, Kentucky, Maryland, Missouri, Ohio, Pennsylvania, Washington, West Virginia and Wyoming; also those of Great Britian and Prussia.

And a very complete Index.

Of the unanimously favorable criticisms of this book, we have only space to quote one:

"It is a work that should be in the hands of every intelligent man connected with a colliery, no matter what his position. It is as valuable to the intelligent miner as it is to the mining engineer or the colliery official."—*Colliery Engineer.*

SCIENTIFIC PUBLISHING COMPANY,

27 PARK PLACE, NEW YORK.

RICHARD P. ROTHWELL,

Civil and Mining Engineer,

EDITOR OF

THE ENGINEERING AND MINING JOURNAL,

NEW YORK.

Examines and Reports on Mineral Properties. Advises on the Working and Management of Mines. Acts as Consulting Engineer to Companies.

---

27 Park Place, New York, N. Y.

WORKS OF

T. STERRY HUNT, M.A., LL.D.

This admirable series of works by Dr. HUNT has just been thoroughly revised to date, and new Prefaces have been added.

Dr. Hunt is equally eminent as a geologist and chemist, and his volumes have the breadth which comes of the complete mastery of the two most important provinces of science. His style has the clearness which can only be won with a teacher in love with his subject.—*Publishers' Weekly.*

CHEMICAL AND GEOLOGICAL ESSAYS.—Third Revised Edition, with a new Preface, 1890; pp. xlvi. and 489; 8vo, - - **$2.50**

MINERAL PHYSIOLOGY AND PHYSIOGRAPHY.—Second Revised Edition, with new Preface, 1890; pp. xvii. and 710, - - **$5.00**

A NEW BASIS FOR CHEMISTRY; *A Chemical Philosophy*—Third Edition, Revised and Augmented, with new Preface, 1890; pp. xvi., 247, 12mo, - - - - - - - - - - - - **$2.00**

In Preparation by the same Author:

"Systematic Mineralogy Based on a Natural Classification."

FROM THE ENGINEERING AND MINING JOURNAL.

It gives us the greatest pleasure to announce that the Scientific Publishing Company has acquired the copyright and plates of all the works of Dr. T. Sterry Hunt, and will hereafter have the exclusive sale of these admirable books. It is not necessary for us to tell the readers of the *Engineering and Mining Journal* that perhaps no scientist of the present day combines in so great degree the highest literary skill with the most thorough knowledge of the chief departments of science. As an original investigator, more particularly in the fields of chemical geology, mineralogy and mineral physiology and physiography, Dr. Hunt's eminent services have won the admiration of the scientific world. His writings on these subjects have all the clearness of expression which characterized Hugh Miller, with the very highest literary finish added. It is a rare pleasure to read his works, and one which the reader would repeat again and again, always finding some new beauty in them. No engineer's or scientist's library is complete without these books, and in bringing them thus prominently before the readers of the *Engineering and Mining Journal*, we believe we are earning their cordial thanks. The works now ready are Chemical and Geological Essays, second edition: Mineral Physiology and Physiography; A New Basis for Chemistry; and, now in preparation, Systematic Mineralogy Based on a Natural Classification.

SCIENTIFIC PUBLISHING COMPANY,

27 Park Place, New York.

THE METALLURGY OF STEEL,

BY

HENRY M. HOWE, A.M., S.B.

Royal Quarto, Handsomely Bound, Printed on Superfine Paper, and Profusely Illustrated.

SECOND EDITION.

***Price,* - - - - - $10.00.**

This work is the most notable contribution to the literature of iron and steel metallurgy ever published. The series of papers on the subject which have appeared as supplements to the "Engineering and Mining Journal" during the past two years have attracted world-wide attention and have received the heartiest commendation from all quarters. The volume now published presents this material in much more convenient shape, with considerable additional matter, giving the results of the most recent research, experiment and practice. Mr. Howe also presents a complete review of all important conclusions reached by earlier investigators, and his masterly discussion of them renders the work classic. Every statement and citation has been carefully weighed and verified and the references to the literature of the subject are given minutely, the book thus furnishing in itself a key to the whole range of steel metallurgy. It also furnishes the results of much new and original investigation, specially undertaken for the present work.

Every metallurgist, every manufacturer of steel in any form, and all who are interested in the iron or steel industries, and all engineers who use iron or steel should have this standard work and cannot afford to be without it.

The unprecedented demand for this work exhausted the first edition within six weeks.

SCIENTIFIC PUBLISHING COMPANY,

PUBLISHERS,

27 PARK PLACE, NEW YORK.

FOR CHEAP MANUFACTURE

OF

IRON AND STEEL

LOCATE AT

HARRIMAN, TENN.,

Where the beautiful Emory River makes through Big Emory Gap.

Hard and soft Hematite Ore, with limestone, close at hand. Best coking coal in great abundance near by.

Says Dr. George A. Koenig, Professor of Mining and Metallurgy in the University of Pennsylvania:

"To make iron cheaply I know of no place better fitted than the location of Emory Gap or its neighborhood. I have thought much, since my examination of this site, of *what could be accomplished here if capital, brains and good will worked together to build up this place.* The more I thought the more the subject grew upon me. . . .

"On the basis of a 25 per cent. sinking fund for the entire plant, and an annual production of only 50,000 tons of pig iron, I calculate a cost per ton of the latter of *four dollars.* This estimate does not include any royalty on either coal or iron ore. . . .

"The establishment of a Basic steel plant in connection with the blast furnaces at Harriman will be the opening of its full resources. From the standpoint of the metallurgist and mining engineer, a more favorable location for the production of steel *is not imaginable*—steel in all its forms; for by the Krupp Basic open hearth process, tool steel, armor plates and gun steel can be manufactured from phosphoric pig iron. There is nothing experimentative in the value of these processes."

Correspondence invited, with regard to capital and sites for Iron and Steel Plants, by the

EAST TENNESSEE LAND CO.,

THOMAS L. JAMES, President.

ADDRESS:

W. H. RUSSELL, General Manager, Harriman, Tenn.

A. A. HOPKINS, Secretary, Times Building, New York.

THE SCIENTIFIC PUBLISHING CO.,

PUBLISHERS OF THE FOLLOWING STANDARD BOOKS:

Gems and Precious Stones of North America.
By GEORGE FREDERICK KUNZ. Illustrated with Eight Colored Plates and numerous Engravings.....Price, $10.00

The Metallurgy of Steel.
By HENRY MARION HOWE. Second Edition. Illustrated.....Price, $10.00

Weddings' Basic Bessemer Process.
Translated from the German, with permission of the author, by WILLIAM B. PHILLIPS and ERNST PROCHASKA..... Price, $3.50

Mining Accidents and Their Prevention.
Also, the United States and Foreign Mining Laws, never before collected or published in accessible form. By Sir FREDERICK AUGUSTUS ABEL..... Price, $4.00

Modern American Methods of Copper Smelting.
By EDWARD D. PETERS, Jr. Illustrated. Second Edition in Press.. Price, $4.00

Copper Smelting, its History and Processes.
By HENRY HUSSEY VIVIAN. Scarce..... Price, $2.00

The Lixiviation of Silver Ores.
By CARL A. STETEFELDT. Illustrated .... Price, $5.00

The Mining Code of the Republic of Mexico.
Translated from the Official Editions in the Original Spanish. By RICHARD E. CHISM..... Price, $1.00

Chemical and Geological Essays.
By Dr. T. STERRY HUNT. Third Edition..... .... Price, $2.50

Mineral Physiology and Physiography.
By Dr. T. STERRY HUNT. Second Edition .... Price, $5.00

A New Basis for Chemistry.
By Dr. T. STERRY HUNT. Third Edition..... ..... Price, $2.00

Systematic Mineralogy, Based on a Natural Classification.
By Dr. T. STERRY HUNT.....Now in preparation.

The SCIENTIFIC PUBLISHING COMPANY has issued a

Classified Catalogue of Scientific and Technical Books,

Which will be found invaluable to those engaged in Chemistry, Mining, Metallurgy, Engineering and kindred sciences.

This Catalogue will be forwarded, Postage Free, on application.

Technical and Scientific Books, Magazines and Papers furnished by the Scientific Publishing Company.

COMPLETE REFERENCE LIBRARIES SUPPLIED.

SCIENTIFIC PUBLISHING CO., Publishers and Booksellers,

27 Park Place, New York.

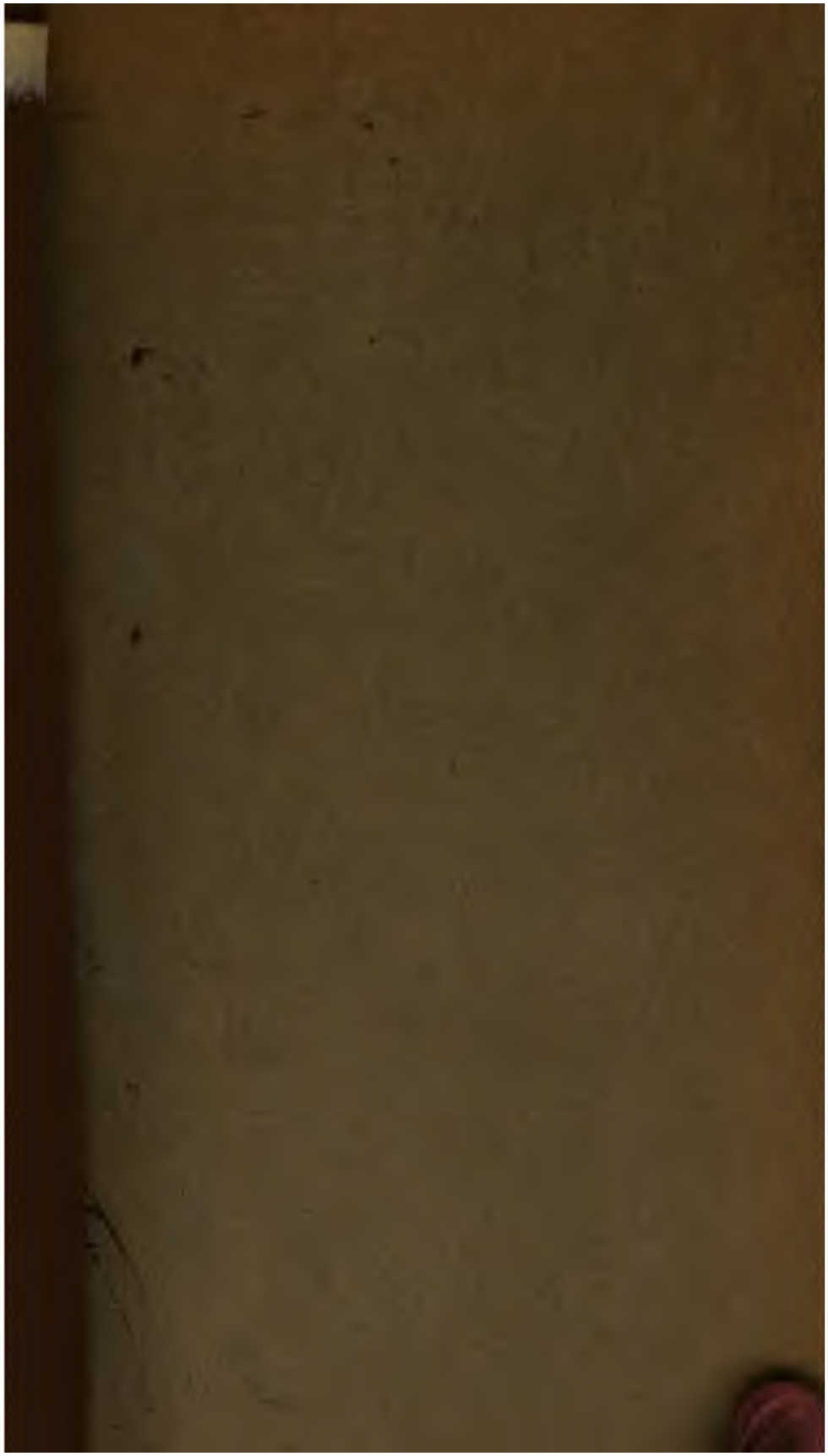

b89074785106

b89074785106a

ENGINEERING
LIBRARY

B89074785106
B89074785106A